PRODUCT APPROVAL FOR HR-251 IMPACT-RESISTANT CAPTURED CURTAIN WALL SYSTEM WITH MULTIPLE GLAZING INFILLS FOR USE IN HURRICANE ZONES REQUIRING LARGE & SMALL MISSILE IMPACT PROTECTION.

GENERAL NOTES:

1. HR-251 CAPTURED CURTAIN WALL SYSTEM LARGE & SMALL MISSILE IMPACT INSULATED GLASS, SHOWN ON THIS PRODUCT EVALUATION DOCUMENT (P.E.D.) HAS BEEN VERIFIED FOR COMPLIANCE IN ACCORDANCE WITH THE 2020 (7th EDITION) OF THE FLORIDA BUILDING CODE. CURTAIN WALL MAY BE INSTALLED WITHIN HIGH VELOCITY HURRICANE ZONES (HVHZ) AND OUT OF THEM (NHVHZ).

   DESIGN WIND LOADS SHALL BE DETERMINED AS PER SECTION 1620 (HVHZ) & 1609(NHVHZ) OF THE ABOVE MENTIONED CODE, FOR A BASIC WIND SPEED AS REQUIRED BY THE JURISDICTION WHERE THIS PRODUCT TO BE INSTALLED FOR A DIRECTIONALITY FACTOR Kd=0.85, USING ASCE 7-16 & SHALL NOT EXCEED THE MAXIMUM (A.S.D.) DESIGN PRESSURE RATING INDICATED ON NOTE 2.

   IN ORDER TO VERIFY THE ABOVE CONDITION, ULTIMATE DESIGN WIND LOADS DETERMINED PER ASCE 7-16 SHALL BE FIRST REDUCED TO A.S.D. DESIGN WIND LOADS BY MULTIPLYING THEM BY 0.6 IN ORDER TO COMPARE THESE W/ MAX. (A.S.D) DESIGN PRESSURE RATINGS INDICATED ON NOTE 2.

   IN ORDER TO VERIFY THAT ANCHORS ON THIS P.E.D., AS TESTED, WERE NOT OVERSTRESSED, A 33% INCREASE IN ALLOWABLE STRESS FOR WIND LOADS WAS NOT USED IN THEIR ANALYSIS.

   THIS PRODUCT'S ADEQUACY FOR IMPACT AND CYCLIC RESISTANCE HAS BEEN VERIFIED IN ACCORDANCE WITH SECTION 1626 & 1609.1.2 OF THE ABOVE MENTIONED CODE AS PER PROTOCOLS TAS-201, TAS-202, TAS-203, AND AAMA 501 (PER SECTIONS 2411.3.2.1.1 & 1709.8.4) PER HURRICANE TEST LABORATORY REPORTS # 0105-0903-08, 0105-0117-05 AND 0105-0210-04 (DOOR JAMB MULLION CERTIFICATION) AND ARCHITECTURAL TESTING LABORATORY REPORT # A4707.01-801-18 AND AS PER SUBMITTED STRUCTURAL CALCULATIONS, PERFORMED AS PER SECTIONS 1616 & 1604 OF THE FLORIDA BUILDING CODE.

2. MAXIMUM A.S.D. DESIGN PRESSURE RATING FOR THIS CURTAIN WALL SHALL BE AS SHOWN ON SHEETS 8, 9, 10, 12, 13 AND 14 THRU 17, AND 22A.

3. THIS PRODUCT WILL NOT REQUIRE A HURRICANE PROTECTION DEVICE.

4. THIS PRODUCT IS APPROVED FOR AIR/WATER INFILTRATION (15.0 PSF WATER PRESSURE).

5. HR-251 CAPTURED CURTAIN WALL SYSTEM LARGE MISSILE IMPACT INSULATED GLASSSHALL COMPLY WITH SECTION 2406 OF THE FLORIDA BUILDING CODE.

6. ALL STEEL FRAMING SHALL BE WELDED IN ACCORDANCE WITH THE AMERICAN WELDING SOCIETY A.W.S. D.1.1 REGULATIONS. USE CERTIFIED WELDERS. USE E-70XX ELECTRODES. ALL JOINT WELDING BETWEEN ANGLES AND STEEL STRUCTURE SHALL BE 3/16" FILLET WELD TYPE.

7. PROVIDE 3/4" MAX. LOAD BEARING SHIM (TYP.), WHEN ALLOWED BY THIS P.A.D.

8. SEE ANCHOR SCHEDULES ON SHEETS 12, 13 AND 14 THRU 17 FOR ANCHOR TYPE IDENTIFICATION AND SPACING.

9. REMAINING COMPONENTS FOR THIS CURTAIN WALL SYSTEM SHALL BE AS INDICATED ON BILL OF MATERIALS, SHEETS 4 AND 5 OF THIS DRAWING.

10. ALL ALUMINUM EXTRUSIONS IN CONTACT WITH DISSIMILAR MATERIALS SHALL COMPLY WITH SECTION III-6 OF THE 2015 ALUMINUM DESIGN MANUAL.

11. SHOP DRAWINGS PREPARED BASED ON THIS APPROVAL AND TAKING INTO ACCOUNT THE SPECIFIC JOB CONDITIONS, SHALL BE SUBMITTED TO THE BUILDING OFFICIAL AS PART OF THE PERMIT DOCUMENTS.

12. SUBSTRATE MATERIAL NOTED ON THESE DRAWINGS AS "BY OTHERS" MUST WITHSTAND THE LOADS IMPOSED BY THE CURTAIN WALL SYSTEM.

13. THIS PRODUCT'S INSTALLATION SHALL COMPLY WITH ALL SPECS INDICATED IN THIS DRAWING PLUS ANY BUILDING AND ZONING REGULATIONS PROVIDED BY THE JURISDICTION WHERE PERMIT IS APPLIED TO.

14. (a) THIS P.E.D. PREPARED BY THIS ENGINEER IS GENERIC AND DOES NOT PROVIDE INFORMATION FOR A SITE SPECIFIC PROJECT; i.e. WHERE THE SITE CONDITIONS DEVIATE FROM THE P.E.D.

    (b) CONTRACTOR TO BE RESPONSIBLE FOR THE SELECTION, PURCHASE AND INSTALLATION INCLUDING LIFE SAFETY OF THIS PRODUCT, BASED ON THIS P.E.D., PROVIDED HE/SHE DOES NOT DEVIATE FROM THE CONDITIONS DETAILED ON THIS DOCUMENT. CONSTRUCTION SAFETY AT SITE IS THE CONTRACTOR'S RESPONSIBILITY.

    (c) THIS P.E.D. WILL BE CONSIDERED INVALID IF ALTERED BY ANY MEANS.

    (d) SITE SPECIFIC PROJECTS SHALL BE PREPARED BY A FLORIDA REGISTERED ENGINEER OR ARCHITECT WHICH WILL BECOME THE ENGINEER OF RECORD (E.O.R.) FOR THE PROJECT AND WHO WILL BE RESPONSIBLE FOR THE PROPER USE OF THE P.E.D. ENGINEER OF RECORD, ACTING AS DELEGATED ENGINEER TO THE P.E.D. ENGINEER, SHALL SUBMIT TO THIS LATTER THE SITE SPECIFIC DRAWINGS FOR REVIEW.

    (e) ORIGINAL P.E.D. SHALL BEAR THE DATE AND ORIGINAL SEAL AND SIGNATURE OF THE PROFESSIONAL ENGINEER OF RECORD THAT PREPARED IT.

15. PRODUCT MANUFACTURER'S LABEL SHALL BE LOCATED ON A READILY VISIBLE LOCATION AT PRODUCT IN ACCORDANCE WITH SECTION 709.5 OF THE FLORIDA BUILDING CODE. ONE LABEL SHALL BE PLACED FOR EVERY OPENING.

INDEX:

SHEET 1: GENERAL NOTES, INDEX AND INSTRUCTIONS.
SHEET 2: HR-251 IMPACT RESISTANT CAPTURED CURTAIN WALL SYSTEM COMPONENTS.
SHEET 3: HR-251 IMPACT RESISTANT CAPTURED CURTAIN WALL SYSTEM COMPONENTS (CONTINUED).
SHEET 4: BILL OF MATERIALS.
SHEET 5: BILL OF MATERIALS (CONTINUED).
SHEET 6: ISOMETRIC ELEVATION FOR HR-251 IMPACT RESISTANT CAPTURED CURTAIN WALL SYSTEM.
SHEET 7: TYPICAL GLAZING DETAILS.
SHEET 8: MAX. FRAME WIDTH "b" & FRAME LENGTH "a" VERSUS A.S.D. DESIGN PRESSURE RATING (p.s.f.) SCHEDULE.
SHEET 9: MAX. A.S.D. DESIGN PRESSURE RATING FOR SINGLE SPAN STANDARD AND CORNER MULLIONS.
SHEET 10: MAX. A.S.D. DESIGN PRESSURE RATING FOR TWIN SPAN STANDARD AND CORNER MULLIONS.
SHEET 11: OPTIONS FOR TWIN SPAN STANDARD AND CORNER MULLIONS INSTALLATION.
SHEET 12: MAX. A.S.D. DESIGN PRESSURE RATING FOR SINGLE SPAN (HEAD & SILL) & TWIN SPAN (SILL ONLY) MULLION CONNECTIONS.
SHEET 13: MAX. A.S.D. DESIGN PRESSURE RATING FOR TWIN SPAN MULLION HEAD ANCHOR CONNECTIONS.
SHEET 14: MAX. A.S.D. DESIGN PRESSURE RATING FOR JAMBS AT SINGLE SPAN CURTAIN WALL FASTENED TO EXISTING STRUCTURE W/ 3/8"ø FASTENERS.
SHEET 15: MAX. A.S.D. DESIGN PRESSURE RATING FOR JAMBS AT TWIN SPAN CURTAIN WALL FASTENED TO EXISTING STRUCTURE W/ 3/8"ø FASTENER
SHEET 16: MAX. A.S.D. DESIGN PRESSURE RATING FOR JAMBS AT SINGLE SPAN CURTAIN WALL FASTENED TO EXISTING STRUCTURE W/ 1/2"ø FASTENERS.
SHEET 17: MAX. A.S.D. DESIGN PRESSURE RATING FOR JAMBS AT TWIN SPAN CURTAIN WALL FASTENED TO EXISTING STRUCTURE W/ 1/2"ø FASTENERS.
SHEET 18: HEAD CONNECTION DETAILS (SIDE VIEWS).
SHEET 19: HORIZONTAL CONNECTION DETAILS (SIDE VIEWS)
SHEET 20: SILL CONNECTION DETAILS (SIDE VIEWS).
SHEET 21: HORIZONTAL SECTIONS AT STANDARD MULLION DETAILS (PLAN).
SHEET 22: JAMB MULLIONS CONNECTIONS AT HORIZONTALS (PLAN).
SHEET 22A: JAMB MULLIONS NOT ATTACHED TO EXISTING STRUCTURE FOR SINGLE SPAN ONLY (PLAN), AND MAX. A.S.D. DESGIN PRESSURE RATING FOR SINGLE SPAN JAMB MULLIONS W/O ANCHORAGE
SHEET 23: CORNER MULLION DETAILS (PLAN).
SHEET 24: JAMB MULLIONS CONNECTIONS AT INSIDE CORNER (PLAN).
SHEET 24A: JAMB MULLIONS NOT ATTACHED TO INSIDE CORNER OF EXISTING STRUCTURE FOR SINGLE SPAN ONLY (PLAN).
SHEET 25: SILL & HEAD CONNECTION DETAILS FOR SINGLE SPAN & SILL CONNECTION DETAIL AT TWIN SPAN (PLANS).
SHEET 26: OPTION #1 FOR HEAD CONNECTION OF TWIN SPAN STANDARD MULLIONS.
SHEET 27: OPTION #2 FOR HEAD CONNECTION OF TWIN SPAN STANDARD MULLIONS.
SHEET 28: HEAD CONNECTION OF TWIN SPAN JAMBS.
SHEET 29: HEAD CONNECTION DETAIL FOR TWIN SPAN CORNER MULLION,
SHEET 30: MULLION AND JAMB SPLICES AT TWIN SPAN ONLY (PLAN).
SHEET 31: MULLION AND JAMB SPLICES AT TWIN SPAN ONLY (SIDE VIEW)
SHEET 32: CORNER MULLION SPLICE AT TWIN SPAN (PLAN).
SHEET 33: STANDARD AND CORNER MULLION CONNECTION TO EXISTING INTERMEDIATE FLOOR STRUCTURE W/ DEAD AND WIND LOAD ANCHORS.
SHEET 34: CORNER MULLION CONNECTION TO EXISTING INTERMEDIATE FLOOR STRUCTURE W/ DEAD & WIND LOAD ANCHORS (PLAN).
SHEET 35: DOOR HEADER CONNECTION TO CURTAIN WALL HORIZONTALS & DOOR SILL CONNECTION TO POURED CONCRETE STRUCTURE AND TO ADJACENT CURTAIN WALL MULLION "F".
SHEET 36: DOOR JAMBS CONNECTION TO CURTAIN WALL.

INSTRUCTIONS:

STEP 1: DETERMINE A.S.D. DESIGN WIND LOAD REQUIREMENTS BASED ON WIND VELOCITY, BUILDING HEIGHT, WIND ZONE, USING APPLICABLE ASCE 7 STANDARDS.

STEP 2: GO TO SCHEDULE ON SHEET 8 TO DETERMINE MAXIMUM A.S.D. DESIGN PRESSURE RATING "W" (psf) OF DESIRED GLASS SIZE BASED ON GLASS PANEL DIMENSIONS.

STEP 3: DETERMINE MAXIMUM MULLION AND JAMB SPAN "L"(FT) FOR A GIVEN MULLION EFFECTIVE SPACING "b", FOR SINGLE AND TWIN SPANS ON SCHEDULES ON SHEETS 9, 10 AND 22A.

STEP 4: USING SCHEDULES ON SHEETS 12, 13 AND 14 THRU 17 SELECT ANCHOR OPTION FOR MULLIONS AND JAMBS WITH A.S.D. DESIGN PRESSURE RATING EQUAL OR GREATER THAN A.S.D. DESIGN LOAD SPECIFIED IN STEP 1.

STEP 5: USING SCHEDULE ON SHEET 19, VERIFY MAXIMUM A.S.D. DESIGN PRESSURE RATING OF HORIZONTALS (IF USED) AND HORIZONTAL EXPANSION.

STEP 6: THE LOWEST VALUE OF A.S.D. DESIGN PRESSURE RATING RESULTING FROM STEPS 2, 3, 4 AND 5 SHALL APPLY TO THE ENTIRE SYSTEM.

THIS DRAWING SHALL ONLY BE USED TO OBTAIN PERMITS IN THE STATE OF FLORIDA

FLORIDA BUILDING CODE (High & Non High Velocity Hurricane Zone)

HR-251 CAPTURED CURTAIN WALL SYSTEM
LARGE & SMALL MISSILE IMPACT INSULATED GLASS

M.P
DRAWN BY

04/15/2021
DATE

21-058
DRAWING No

SHEET 1 OF 36

Oldcastle BuildingEnvelope™
803 Airport Rd - Terrell, TX 75160
www.OldcastleBE.com - Phone 800-869-4567

REV. No	DESCRIPTION	DATE
1	OLD 18-032	04/15/21
2		

REV. No	DESCRIPTION	DATE
3		
4		

©2021 TILTECO, INC

TILTECO INC.
TILLIT TESTING & ENGINEERING COMPANY
6355 N.W. 36th. St., Ste. 305, VIRGINIA GARDENS, FLORIDA 33166
Phone : (305)871-1530 . Fax : (305)871-1531
e-mail: titeco@aol.com
CA-0006719
WALTER A. TILLIT Jr., P.E.
FLORIDA Lic. # 44167

WALTER A. TILLIT JR. LICENSE No. 44167 STATE OF FLORIDA PROFESSIONAL ENGINEER

4/16/2021

P.E. SEAL/SIGNATURE/DATE

HR-251 IMPACT RESISTANT CAPTURED CURTAIN WALL SYSTEM COMPONENTS

SCALE : 1/4" = 1" (EXCEPT AS NOTED)

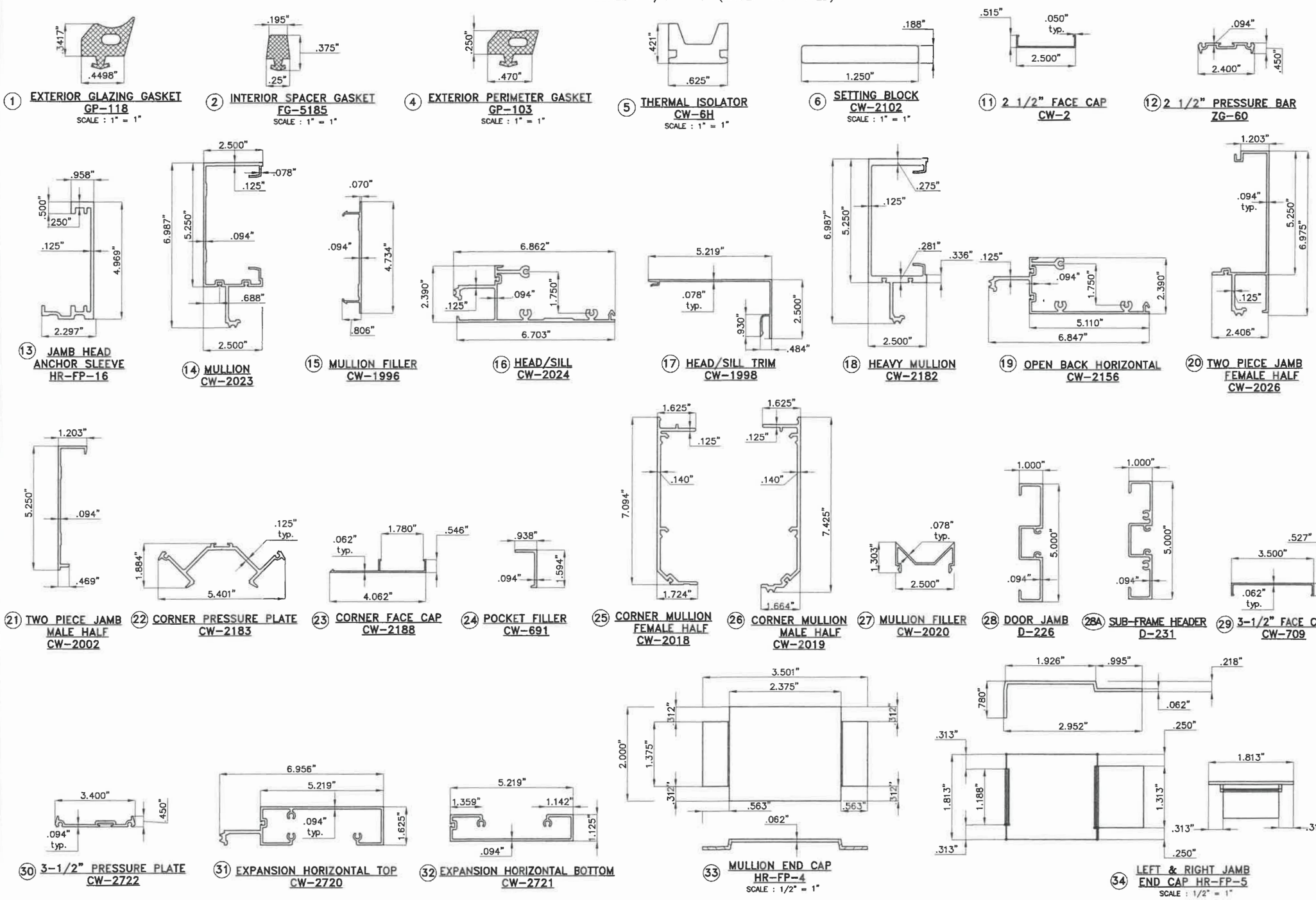

FLORIDA BUILDING CODE (High & Non High Velocity Hurricane Zone)

M.P	DRAWN BY
04/15/2021	DATE
21-058	DRAWING No
SHEET 2 OF 36	

HR-251 CAPTURED CURTAIN WALL SYSTEM
LARGE & SMALL MISSILE IMPACT INSULATED GLASS

Oldcastle BuildingEnvelope™
803 Airport Rd - Terrell, TX 75160
www.OldcastleBE.com - Phone 800-869-4567

REV. No	DESCRIPTION	DATE	REV. No	DESCRIPTION	DATE
1	OLD 18-032	04/15/21	3		
2			4		

©2021 TILTECO, INC

TILTECO INC.
TILLIT TESTING & ENGINEERING COMPANY
6355 N.W. 36th. St., Ste. 305, VIRGINIA GARDENS, FLORIDA 33166
Phone : (305)871-1530 . Fax : (305)871-1531
e-mail: tilteco@aol.com
CA-0006719
WALTER A. TILLIT Jr., P.E.
FLORIDA Lic. # 44167

WALTER A. TILLIT JR. LICENSE No. 44167 STATE OF FLORIDA PROFESSIONAL ENGINEER

4/16/2021

P.E. SEAL/SIGNATURE/DATE

HR-251 IMPACT RESISTANT CAPTURED CURTAIN WALL SYSTEM COMPONENTS (CONTINUED)

SCALE : 1/4" = 1" (EXCEPT AS NOTED)

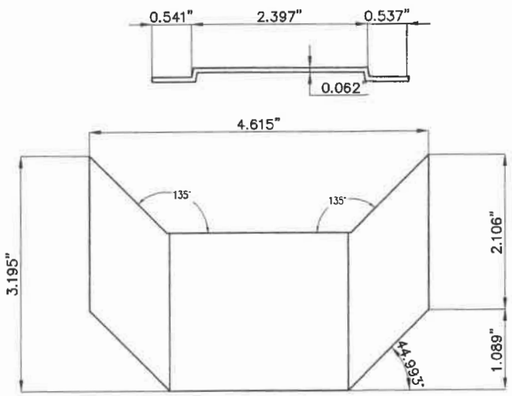

36 90 DEG. MULLION END CAP
HR-FP-8
SCALE : 1/2" = 1"

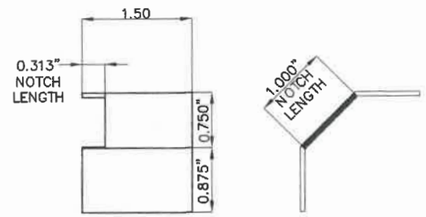

37 WATER DIVERTER
HR-FP-12

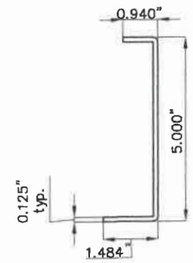

39 WALL JAMB SPLICE
FEMALE HALF
HR-FP-14

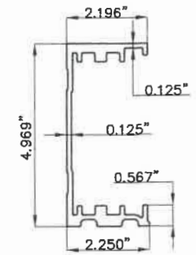

40 HEAD ANCHOR SLEEVE
HR-FP-15

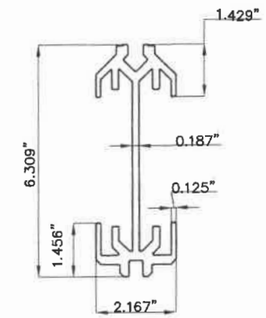

41 HEAD ANCHOR SLEEVE
CORNER HR-FP-17

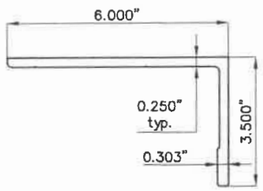

42 HEAD ANCHOR LEFT
HR-FP-24

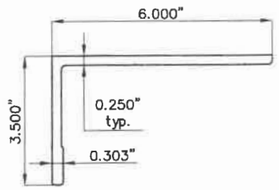

42A HEAD ANCHOR RIGHT
HR-FP-25

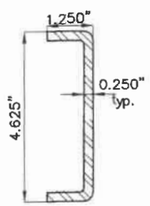

50 STEEL REINFORCING
FG5000-PP-8

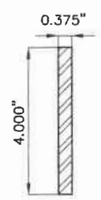

51 STEEL REINFORCING
RS-16

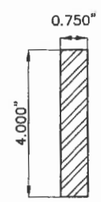

52 STEEL REINFORCING
RS-17

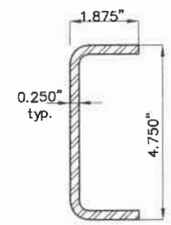

53 STEEL REINFORCING
RS-25

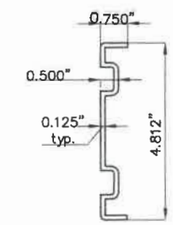

55 WALL JAMB SPLICE
MALE HALF
HR-FP-18

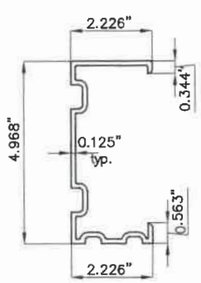

63 MULLION SPLICE
HR-FP-20

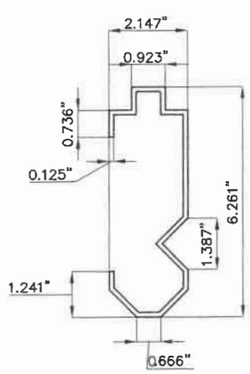

64 CORNER SPLICE
HR-FP-21

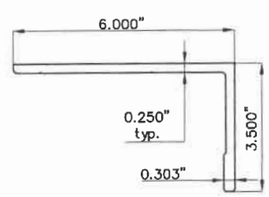

65 HEAD ANCHOR
CORNER LEFT
HR-FP-22

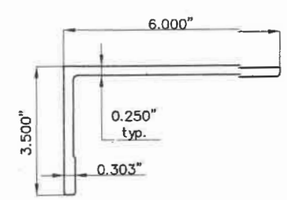

66 HEAD ANCHOR
CORNER RIGHT
HR-FP-23

FLORIDA BUILDING CODE (High & Non High Velocity Hurricane Zone)

M.P
DRAWN BY

04/15/2021
DATE

21-058
DRAWING No

SHEET 3 OF 36

HR-251 CAPTURED CURTAIN WALL SYSTEM
LARGE & SMALL MISSILE IMPACT INSULATED GLASS

Oldcastle BuildingEnvelope™
803 Airport Rd - Terrell, TX 75160
www.OldcastleBE.com - Phone 800-869-4587

REV. No	DESCRIPTION	DATE	REV. No	DESCRIPTION	DATE
1	OLD 16-032	04/15/21	3		
2			4		

©2021 TILTECO, INC

TILTECO INC.
TILLIT TESTING & ENGINEERING COMPANY
6355 N.W. 36th. St., Ste. 305, VIRGINIA GARDENS, FLORIDA 33166
Phone : (305)871-1530 . Fax : (305)871-1531
e-mail: tilteco@aol.com
CA-0006719
WALTER A. TILLIT Jr., P.E.
FLORIDA Lic. # 44167

WALTER A. TILLIT JR. LICENSED No. 44167 STATE OF FLORIDA PROFESSIONAL ENGINEER

P.E. SEAL/SIGNATURE/DATE

BILL OF MATERIALS

ITEM No.	PART NUMBER	DESCRIPTION	DIMENSIONS	MATERIAL	MANUFACTURER	NOTES
1.	GP-118	EXTERIOR GLAZING GASKET	.342" X .450"	VINYL	EPG	70 DUROMETER
2.	FG-5185	INTERIOR SPACER GASKET	.25" X .375"	VINYL	EPG	
3.	DOW 995	STRUCTURAL SILICONE	FILL SPACE (.25" x .56") TYP. MULL (.25" X .625") @CORNER	SILICONE	DOW CORNING	
4.	GP-103	EXTERIOR PERIMETER GASKET	.250" X .470"	VINYL	EPG	
5.	CW-6H	THERMAL ISOLATOR	.625" X .421"	RIGID VINYL	OLDCASTLE BUILDINGENVELOPE	
6.	CW-2102	SETTING BLOCK	1.250" X .188" X 4" LONG	EPDM	EPG	
7.	795	PERIMETER SEALANT	FILL SPACE	SILICONE	DOW CORNING	
8.	FS-8	ASSEMBLY SCREW	#14 X 1" HHSTS FS-322 (STALGARD COATED BY ELCO)	STEEL	ELCO	
9.	FS-7	ASSEMBLY SCREW	#10 X 3/4" PFH TYPE B	STEEL	VARIES	(2)@ EA. HORIZ. 12" O.C.@ 2PC JAMB
10.	FS-322	PRESSURE PLATE SCREW	#12-14 X 1" HWH #3 FS-322 (STALGARD COATED BY ELCO)	STEEL	ELCO	(1) @ EA. 24" O.C.
11.	CW-2	FACE CAP	.515" X 2.5" X .050"	6063-T6 ALUMINUM	OLDCASTLE BUILDINGENVELOPE	
12.	ZG-60	2 1/2" PRESSURE BAR	2.40" X .450" X .094"	6063-T6 ALUMINUM	OLDCASTLE BUILDINGENVELOPE	SEE NOTE: #1
13.	HR-FP-16	JAMB HEAD ANCHOR SLEEVE	2 3/16" X 5 5/16" X 5 1/8" LONG	6063-T6 ALUMINUM	OLDCASTLE BUILDINGENVELOPE	USED @ JAMBS
14.	CW-2023	MULLION	2.50" X 6.987" X .094"	6063-T6 ALUMINUM	OLDCASTLE BUILDINGENVELOPE	
15.	CW-1996	MULLION FILLER	.804" X 4.734" X .070"	6063-T6 ALUMINUM	OLDCASTLE BUILDINGENVELOPE	
16.	CW-2024	HEAD/SILL	2.39" X 6.862" X .094"	6063-T6 ALUMINUM	OLDCASTLE BUILDINGENVELOPE	
17.	CW-1998	HEAD/SILL TRIM	2.50" X 5.219" X .078"	6063-T6 ALUMINUM	OLDCASTLE BUILDINGENVELOPE	
18.	CW-2182	HEAVY MULLION	2.50" X 6.987" X .094"	6063-T6 ALUMINUM	OLDCASTLE BUILDINGENVELOPE	
19.	CW-2156	HORIZONTAL	2.39" X 6.847" X .094"	6063-T6 ALUMINUM	OLDCASTLE BUILDINGENVELOPE	
20.	CW-2026	TWO PIECE JAMB FEMALE HALF	2.40" X 6.975" X .094"	6063-T6 ALUMINUM	OLDCASTLE BUILDINGENVELOPE	
21.	CW-2002	TWO PIECE JAMB MALE HALF	1.203" X 5.25" X .094"	6063-T6 ALUMINUM	OLDCASTLE BUILDINGENVELOPE	
22.	CW-2183	CORNER PRESSURE PLATE	1.884" X 5.401" X .125"	6063-T6 ALUMINUM	OLDCASTLE BUILDINGENVELOPE	
23.	CW-2188	CORNER FACE CAP	.546" X 4.062" X .062"	6063-T5 ALUMINUM	OLDCASTLE BUILDINGENVELOPE	
24.	CW-691	POCKET FILLER	.938" X 1.594" X .094"	6063-T5 ALUMINUM	OLDCASTLE BUILDINGENVELOPE	
25.	CW-2018	CORNER MULLION FEMALE HALF	1.724" X 7.094" X .140"	6063-T6 ALUMINUM	OLDCASTLE BUILDINGENVELOPE	
26.	CW-2019	CORNER MULLION MALE HALF	1.724" X 7.094" X .140"	6063-T6 ALUMINUM	OLDCASTLE BUILDINGENVELOPE	
27.	CW-2020	CORNER MULLION FILLER	1.302" X 2.50" X .078"	6063-T5 ALUMINUM	OLDCASTLE BUILDINGENVELOPE	
28.	D-226	DOOR JAMB	1.00" X 5.00" X .094"	6063-T6 ALUMINUM	OLDCASTLE BUILDINGENVELOPE	
28A.	D-231	SUB-FRAME HEADER	1.00" X 5.00" X .094"	6063-T6 ALUMINUM	OLDCASTLE BUILDINGENVELOPE	
29.	CW-709	3-1/2" FACE CAP	3.50" X .527" X .062"	6063-T6 ALUMINUM	OLDCASTLE BUILDINGENVELOPE	
30.	CW-2722	3-1/2" PRESSURE PLATE	3.40" X .450" X .094"	6063-T6 ALUMINUM	OLDCASTLE BUILDINGENVELOPE	
31.	CW-2720	EXPANSION HORIZONTAL TOP HALF	1.625" X 6.957" X .094"	6063-T6 ALUMINUM	OLDCASTLE BUILDINGENVELOPE	
32.	CW-2721	EXPANSION HORIZONTAL BOTTOM HALF	1.125" X 5.219" X .094"	6063-T6 ALUMINUM	OLDCASTLE BUILDINGENVELOPE	

NOTE #1: ALL VERTICALS PRESSURE PLATES SHALL BE CUT ¼" SHORT IN LENGTH TO ALLOW FOR WEEP SLOT

FLORIDA BUILDING CODE (High & Non High Velocity Hurricane Zone)

HR-251 CAPTURED CURTAIN WALL SYSTEM
LARGE & SMALL MISSILE IMPACT INSULATED GLASS

M.P
DRAWN BY

04/15/2021
DATE

21-058
DRAWING No

SHEET 4 OF 36

Oldcastle BuildingEnvelope™
803 Airport Rd - Terrell, TX 75160
www.OldcastleBE.com - Phone 800-869-4567

REV. No	DESCRIPTION	DATE	REV. No	DESCRIPTION	DATE
1	OLD 18-032	04/15/21	3		
2			4		

©2021 TILTECO, INC

TILTECO INC.
TILLIT TESTING & ENGINEERING COMPANY
6355 N.W. 36th. St., Ste. 305, VIRGINIA GARDENS, FLORIDA 33166
Phone : (305)871-1530 , Fax : (305)871-1531
e-mail: tilteco@aol.com
CA-0006719
WALTER A. TILLIT Jr., P.E.
FLORIDA Lic. # 44167

WALTER A. TILLIT JR. LICENSE No. 44167 STATE OF FLORIDA PROFESSIONAL ENGINEER

P.E. SEAL/SIGNATURE/DATE

BILL OF MATERIALS (CONTINUED)

ITEM No.	PART NUMBER	DESCRIPTION	DIMENSIONS	MATERIAL	MANUFACTURER	NOTES
33.	HR-FP-4	MULLION END CAPS/WATER DIVERTER	3.5 X 2.00 X .062	RIGID VINYL	OLDCASTLE BUILDINGENVELOPE	SEE NOTE # 2 BELOW
34.	HR-FP-5	LEFT AND RIGHT JAMB END CAPS/WATER DIVERTER	2.96 X 0.78 X .062	RIGID VINYL	OLDCASTLE BUILDINGENVELOPE	SEE NOTE # 2 BELOW
36.	HR-FP-8	90 DEG MULLION END CAP	4.615 X 3.195 X .062	RIGID VINYL	OLDCASTLE BUILDINGENVELOPE	TOP & BOTTOM OF MULLION SEE NOTE # 2 BELOW
37.	HR-FP-12	WATER DIVERTER	1.50 X 1.00 X .062	RIGID VINYL	OLDCASTLE BUILDINGENVELOPE	1.50 LONG SEE NOTE # 2 BELOW
39.	HR-FP-14	TWO PART WALL JAMB SPLICE FEMALE HALF	5.00 X 1.484 X .125 X 6" LONG	6063-T6 ALUMINUM	OLDCASTLE BUILDINGENVELOPE	AT (2) PART JAMB CASE: 20 + 21
40.	HR-FP-15	HEAD ANCHOR SLEEVE	2 3/16" X 4 15/16" X X 2 1/2" LONG	6063-T6 ALUMINUM	OLDCASTLE BUILDINGENVELOPE	
41.	HR-FP-17	HEAD ANCHOR SLEEVE CORNER	2 3/16" X 6 3/16" X 3" LONG	6063-T6 ALUMINUM	OLDCASTLE BUILDINGENVELOPE	USED @ JAMBS
42.	HR-FP-24	HEAD ANCHOR LEFT	3 1/2" x 6" x 4 1/4" LONG	6063-T6 ALUMINUM	OLDCASTLE BUILDINGENVELOPE	
42A.	HR-FP-25	HEAD ANCHOR RIGHT	3 1/2" x 6" x 4 1/4" LONG	6063-T6 ALUMINUM	OLDCASTLE BUILDINGENVELOPE	
43.	FASTENER	ANCHOR BOLT	5/8"-11 X 4 1/2" SAE GRD 5 BOLT, HEX NUT AND WASHER	STEEL	VARIES	ZINC COATED, PER ASTM B-633
44.	**	STEEL DEADLOAD ANCHOR	4" X 6" X 5/16" X 5" LONG	A36 STEEL	VARIES	ZINC COATED, PER ASTM B-633.
45.	**	SLIP PAD	4" X 4" X .063	VINYL	KORALATH	USED @ MID POINT ANCHORS
46.	FASTENER	PERIMETER ANCHOR	3/8"-13 X 2" TYP F BOLT	STEEL	VARIES	ZINC COATED, PER ASTM B-633.
47.	**	STEEL DEADLOAD ANCHOR @ CORNER	4" X 8" X 1/4" X 5" LONG	A36 STEEL	VARIES	
48.	FASTENER	STEEL REINFORCING ATTACHMENT BOLT	1/4"-20 X 2" BOLT WITH WASHER AND NUT	STEEL	VARIES	ZINC COATED, PER ASTM B-633
49.	SM-5601	JOINT SEALANT TAPE	.125" X .750" X VARIES	BUTYL	SCHNEE-MOREHEAD	
50.	FG5000-PP-8	REINFORCING STEEL	4 5/8" X 1 1/4" X 1/4" CHANNEL	A36 STEEL	VARIES	USED @ VERT. CORNER MULLION, COAT ZINC RICH PRIMER
51.	RS-16	STEEL REINFORCING INCLUDES RS-25	3/8" X 4" STEEL BAR RS-25 WELDED EVERY 18" WITH 2"X 3/32" WELDS	A36 STEEL	VARIES	USED @ VERT. MULLION COAT ZINC RICH PRIMER, 76" LONG
52.	RS-17	STEEL REINFORCING INCLUDES RS-25	3/4" X 4" STL. BAR WITH RS-25	A36 STEEL	VARIES	
53.	RS-25	REINFORCING STEEL	4 3/4" X 1 7/8" X 1/4" CHANNEL	A36 STEEL	VARIES	COAT ZINC RICH PRIMER
54.	FASTENER	STEEL REINFORCING ATTACHMENT BOLT	1/4"-20 X 1 1/2" SAE GRADE 5 BOLT WITH WASHER AND NUT	STEEL	VARIES	THROUGH-BOLT @ INT HORIZONTALS
55.	HR-FP-18	TWO PART WALL JAMB SPLICE MALE HALF	.75" X 4.812" X .125"	6063-T6 ALUMINUM	OLDCASTLE BUILDINGENVELOPE	AT (2) PART JAMB CASE
59.	FASTENER	ATTACHMENT BOLT	1/4"-20 X 2 1/4" BOLT WITH WASHER AND NUT	STEEL	VARIES	
60.	FASTENER	ATTACHMENT BOLT	1/4"-20 X 3" SAE GRADE 5 BOLT WITH WASHER AND NUT	STEEL	VARIES	THROUGH-BOLT @ INT HORIZONTALS
63.	HR-FP-20	MULLION AND STANDARD JAMB SPLICE	2.16" X 4.96" X .125"X 6" LONG	6063-T6 ALUMINUM	OLDCASTLE BUILDINGENVELOPE	
64.	HR-FP-21	CORNER MULLION SPLICE	2.147" X 6.314" X .125"	6063-T6 ALUMINUM	OLDCASTLE BUILDINGENVELOPE	
65.	HR-FP-22	CORNER HEAD ANCHOR LEFT	2.147" X 6.314" X .25"	6063-T6 ALUMINUM	OLDCASTLE BUILDINGENVELOPE	
66.	HR-FP-23	CORNER HEAD ANCHOR RIGHT	2.147" X 6.314" X .25"	6063-T6 ALUMINUM	OLDCASTLE BUILDINGENVELOPE	

** NO PART NUMBER ASSIGNED
NOTE #2-BEAD OF DOW CORNING 995 SILICONE SHALL BE APPLIED TO FRAME SURFACE BEFORE PART IS INSTALLED

FLORIDA BUILDING CODE (High & Non High Velocity Hurricane Zone)

M.P
DRAWN BY

04/15/2021
DATE

21-058
DRAWING No

SHEET 5 OF 36

HR-251 CAPTURED CURTAIN WALL SYSTEM
LARGE & SMALL MISSILE IMPACT INSULATED GLASS

Oldcastle BuildingEnvelope™
803 Airport Rd - Terrell, TX 75160
www.OldcastleBE.com - Phone 800-869-4567

REV. No	DESCRIPTION	DATE	REV. No	DESCRIPTION	DATE
1	OLD 18-032	04/15/21	3		
2			4		

©2021 TILTECO, INC

TILTECO INC.
TILLIT TESTING & ENGINEERING COMPANY
6355 N.W. 36th. St., Ste. 305, VIRGINIA GARDENS, FLORIDA 33166
Phone : (305)871-1530 . Fax : (305)871-1531
e-mail: tilteco@aol.com
CA-0006719
WALTER A. TILLIT Jr., P.E.
FLORIDA Lic. # 44167

WALTER A. TILLIT JR. LICENSE No. 44167 STATE OF FLORIDA PROFESSIONAL ENGINEER

4/16/2021

P.E. SEAL/SIGNATURE/DATE

ISOMETRIC ELEVATION FOR HR-251 IMPACT RESISTANT CAPTURED CURTAIN WALL SYSTEM

N.T.S.

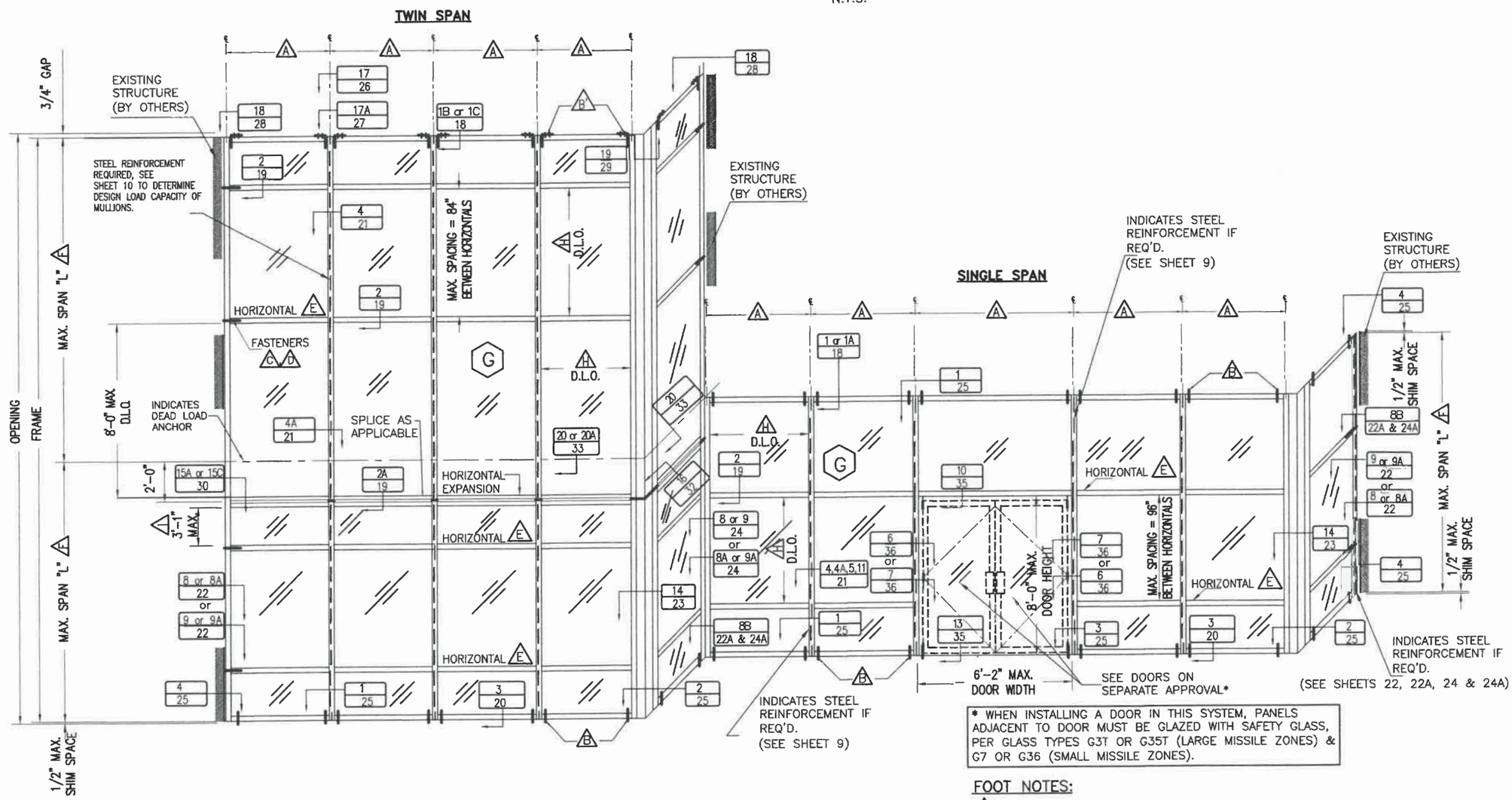

* WHEN INSTALLING A DOOR IN THIS SYSTEM, PANELS ADJACENT TO DOOR MUST BE GLAZED WITH SAFETY GLASS, PER GLASS TYPES G3T OR G35T (LARGE MISSILE ZONES) & G7 OR G36 (SMALL MISSILE ZONES).

FOOT NOTES:

- (A) FOR MULLION AND JAMB SPACING AND MAX. MULLION SPAN SEE SHEETS 9, 10 AND 22A.
- (B) FOR HEAD (AT SINGLE SPAN CASE) AND SILL (AT SINGLE AND TWIN SPAN CASES), FASTENERS QUANTITY, TYPES AND SPECS SEE SHEET 12.
- (B) FOR HEAD (AT TWIN SPAN), FASTENERS QUANTITY, TYPES AND SPECS SEE SHEET 13.
- (C) FOR JAMB FASTENERS QUANTITY, TYPES AND SPECS SEE SHEETS 14 THRU 17.
- (D) SEE SHEETS 14 THRU 17 FOR MAXIMUM A.S.D DESIGN PRESSURE RATING FOR JAMBS CONNECTED TO EXISTING STRUCTURE.
- (E) USE OF HORIZONTALS (SEE SECTION 2/19 AND 2A/19) DESIGN LOADS FOR LIMITATIONS.
- (F) FOR MAXIMUM MULLION AND JAMB SPAN SEE SHEETS 9, 10 AND 22A.
- (G) FOR GLAZING DETAILS AND GLASS SCHEDULE SEE SHEET 7.
- (H) FOR MAXIMUM D.L.O. SEE SCHEDULE ON SHEET 8.
- (I) 3 1/2" EXPANSION HORIZONTAL SHALL ALWAYS BE ACCOMPANIED BY A 2 1/2"HORIZONTAL BELOW IT @ 37" MAXIMUM DISTANCE.

FLORIDA BUILDING CODE (High & Non High Velocity Hurricane Zone)

M.P DRAWN BY

04/15/2021 DATE

21-058 DRAWING No

SHEET 6 OF 36

HR-251 CAPTURED CURTAIN WALL SYSTEM
LARGE & SMALL MISSILE IMPACT INSULATED GLASS

Oldcastle BuildingEnvelope™
803 Airport Rd - Terrell, TX 75160
www.OldcastleBE.com - Phone 800-869-4567

REV. No	DESCRIPTION	DATE	REV. No	DESCRIPTION	DATE
1	OLD 18-032	04/15/21	3		
2			4		

©2021 TILTECO, INC

TILTECO INC.
TILLIT TESTING & ENGINEERING COMPANY
6355 N.W. 36th. St., Ste. 305, VIRGINIA GARDENS, FLORIDA 33166
Phone : (305)871-1530 . Fax : (305)871-1531
e-mail: tilteco@aol.com
CA-00067719
WALTER A. TILLIT JR., P.E.
FLORIDA Lic. # 44167

P.E. SEAL/SIGNATURE/DATE

WALTER A. TILLIT JR. LICENSE No. 44167 STATE OF FLORIDA PROFESSIONAL ENGINEER

TYPICAL GLAZING DETAILS

* USE 13/16" MIN. GLASS BITE AT CORNER MULLION LOCATIONS (SEE SHEETS 25 AND 32)

SCALE 1/8" = 1"

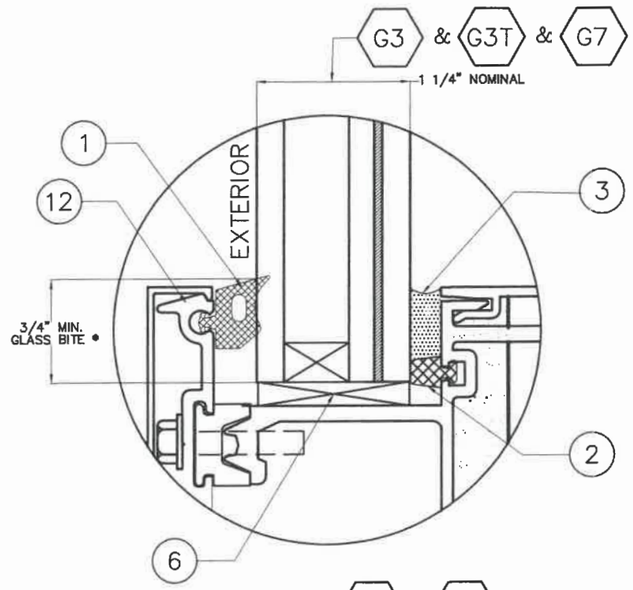

GLASS TYPES G3 & G3T

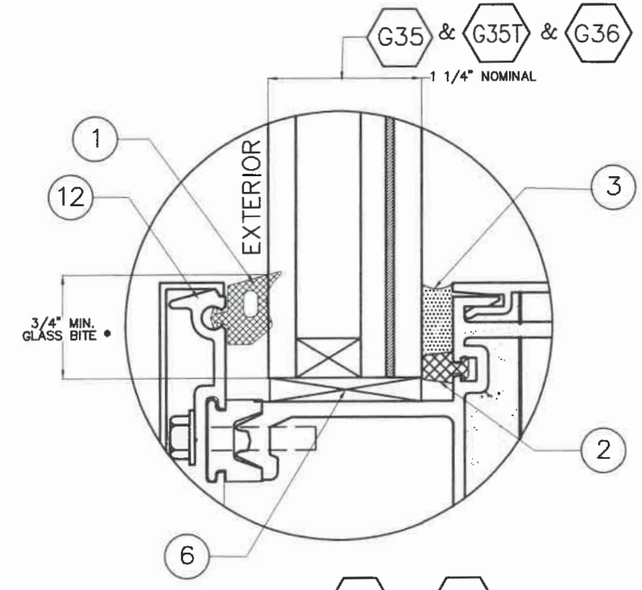

GLASS TYPES G35 & G35T

GLASS SCHEDULE

GLASS LABEL	GLASS COMPOSITION	MANUFACTURER NAME	MAX. D.L.O.	MISSILE TYPE
G3	1 1/4" INSULATED LAMINATED GLASS CONSISTING OF EXTERIOR 1/4" H.S. – 1/2" AIR SPACE – 1/4" H.S. – 090" SENTRY GLASS PLUS IONOPLAST INTERLAYER – 1/4" H.S.	KURARAY AMERICA INC.	SEE SCHEDULE ON SHEET 8	LARGE MISSILE IMPACT
G3T	1 1/4" INSULATED LAMINATED GLASS CONSISTING OF EXTERIOR 1/4" TEMP. – 1/2" AIR SPACE – 1/4" H.S. – 090" SENTRY GLASS PLUS IONOPLAST INTERLAYER – 1/4" H.S.	KURARAY AMERICA INC.	SEE SCHEDULE ON SHEET 8	LARGE MISSILE IMPACT
G35	1 1/4" INSULATED LAMINATED GLASS CONSISTING OF EXTERIOR 1/4" H.S. – 1/2" AIR SPACE –1/4" H.S. – 0.075" SAFLEX CP–SAFEX AND SAFLEX HP COMPOSITE GLASS INTERLAYER WITH PET CORE – 1/4" H.S.	EASTMAN CHEMICAL COMPANY	SEE SCHEDULE ON SHEET 8	LARGE MISSILE IMPACT
G35T	1 1/4" INSULATED LAMINATED GLASS CONSISTING OF EXTERIOR 1/4" H.S. – 1/2" AIR SPACE –1/4" H.S. – 0.075" SAFLEX CP–SAFEX AND SAFLEX HP COMPOSITE GLASS INTERLAYER WITH PET CORE – 1/4" H.S.	EASTMAN CHEMICAL COMPANY	SEE SCHEDULE ON SHEET 8	LARGE MISSILE IMPACT

GLASS SCHEDULE (CONT'D)

GLASS LABEL	GLASS COMPOSITION	MANUFACTURER NAME	MAX. D.L.O.	MISSILE TYPE
G7	1 1/4" INSULATED LAMINATED GLASS CONSISTING OF EXTERIOR 1/4" TEMP. – 1/2" AIR SPACE – 1/4" TEMP. – 060" DUPONT BUTACITE PVB INTERLAYER – 1/4" H.S.	KURARAY AMERICA INC.	SEE SCHEDULE ON SHEET 8	SMALL MISSILE IMPACT
G36	1 1/4" INSULATED LAMINATED GLASS CONSISTING OF EXTERIOR 1/4" TEMP. – 1/2" AIR SPACE – 1/4" TEMP. –0.060" SAFLEX CP–SAFEX AND SAFLEX HP COMPOSITE GLASS INTERLAYER WITH PET CORE – 1/4" H.S.	EASTMAN CHEMICAL COMPANY	SEE SCHEDULE ON SHEET 8	SMALL MISSILE IMPACT

FLORIDA BUILDING CODE (High & Non High Velocity Hurricane Zone)

HR-251 CAPTURED CURTAIN WALL SYSTEM
LARGE & SMALL MISSILE IMPACT INSULATED GLASS

Oldcastle BuildingEnvelope™
803 Airport Rd - Terrell, TX 75160
www.OldcastleBE.com - Phone 800-869-4567

REV. No	DESCRIPTION	DATE	REV. No	DESCRIPTION	DATE
1	OLD 18–032	04/15/21	3		
2			4		

M.P
DRAWN BY

04/15/2021
DATE

21–058
DRAWING No

SHEET 7 OF 36

©2021 TILTECO, INC

TILTECO INC.
TILLIT TESTING & ENGINEERING COMPANY
6355 N.W. 36th. St., Ste. 305, VIRGINIA GARDENS, FLORIDA 33166
Phone : (305)871–1530 . Fax : (305)871–1531
e–mail: tilteco@aol.com
CA–0006719
WALTER A. TILLIT Jr., P.E.
FLORIDA Lic. # 44167

WALTER A. TILLIT JR. ★ LICENSE ★ No. 44167 ★ STATE OF FLORIDA ★ PROFESSIONAL ENGINEER

P.E. SEAL/SIGNATURE/DATE

MAXIMUM FRAME WIDTH "b" AND FRAME LENGTH "a" VERSUS A.S.D. DESIGN PRESSURE RATING (psf) SCHEDULE *

GLASS TYPES G3 & G3T

DIMENSION "b"	DIMENSION "a"	MAXIMUM A.S.D. DESIGN PRESSURE RATING(psf)
24"	from 24" to 96"	±90.0
30"	from 30" to 96"	±90.0
36"	from 36" to 96"	±90.0
42"	from 42" to 96"	±90.0
48"	from 48" to 96"	±90.0
54"	from 54" to 96"	±90.0
57.5"	from 57.5" to 96"	±90.0
63.5"	from 63.5" to 86"	±81.0
69.5"	from 69.5" to 79"	±74.0

GLASS TYPES G35 & G35T

DIMENSION "b"	DIMENSION "a"	MAXIMUM A.S.D. DESIGN PRESSURE RATING(psf)
24"	from 24" to 96"	±100.0
30"	from 30" to 96"	±100.0
36"	from 36" to 96"	±100.0
42"	from 42" to 96"	±100.0
48"	from 48" to 96"	±100.0
54"	from 54" to 96"	±100.0
57.5"	from 57.5" to 96"	±100.0
63.5"	from 63.5" to 87"	±90.0
69.5"	from 69.5" to 77"	±82.0

GLASS TYPE G7

DIMENSION "b"	DIMENSION "a"	MAXIMUM A.S.D. DESING PRESSURE RATING(psf)
24"	from 24" to 96"	±90.0
30"	from 30" to 96"	±90.0
36"	from 36" to 96"	±90.0
42"	from 42" to 96"	±90.0
48"	from 48" to 96"	±90.0
54"	from 54" to 89"	±90.0
57.5"	from 57.5" to 84"	±90.0
60"	from 60" to 89"	±86.3
66"	from 66" to 73"	±78.4
69"	from 69" to 70"	±75.0

GLASS TYPE G36

DIMENSION "b"	DIMENSION "a"	MAXIMUM A.S.D. DESING PRESSURE RATING(psf)
24"	from 24" to 96"	±90.0
30"	from 30" to 96"	±90.0
36"	from 36" to 96"	±90.0
42"	from 42" to 96"	±90.0
48"	from 48" to 96"	±90.0
54"	from 54" to 89"	±90.0
57.5"	from 57.5" to 84"	±90.0
60"	from 60" to 89"	±86.3
66"	from 66" to 73"	±78.4
69"	from 69" to 70"	±75.0

DIMENSIONS LEGEND **

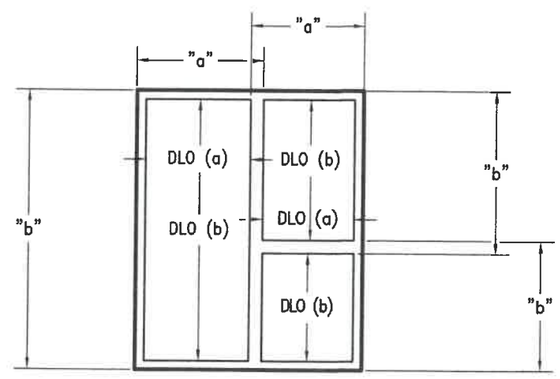

** SIDE "a" IS ALWAYS EQUAL OR SHORTER THAN "b".
"a", "b" ,AY BE ORIENTED IN ANY DIRECTION.

* DETERMINATION OF MAXIMUM DAY LIGHT OPENING (D.L.O.) AT EACH END OF GLASS GIVEN "b" & "a"

SIDE	MAX. DAY LIGHT OPENING	
	(D.L.O.) Formula at vertical & jamb mullions	(D.L.O.) Formula at horizontal, head & sill frames
MAX. D.L.O. (b) (SHORT SIDE)	"b"−5.00"	--
MAX. D.L.O. (a) (LONG SIDE)	--	"a"−5.00"

FLORIDA BUILDING CODE (High & Non High Velocity Hurricane Zone)

M.P
DRAWN BY

04/15/2021
DATE

21−058
DRAWING No

SHEET 8 OF 36

HR-251 CAPTURED CURTAIN WALL SYSTEM
LARGE & SMALL MISSILE IMPACT INSULATED GLASS

oldcastle BuildingEnvelope™
803 Airport Rd - Terrell, TX 75160
www.OldcastleBE.com - Phone 800-869-4567

REV. No	DESCRIPTION	DATE	REV. No	DESCRIPTION	DATE
1	OLD 18−032	04/15/21	3		
2			4		

©2021 TILTECO, INC

TILTECO INC.
TILLIT TESTING & ENGINEERING COMPANY
6355 N.W. 36th. St., Ste. 305, VIRGINIA GARDENS, FLORIDA 33166
Phone : (305)871−1530 . Fax : (305)871−1531
e−mail: tilteco@aol.com
CA−0006719
WALTER A. TILLIT Jr., P.E.
FLORIDA Lic. # 44167

WALTER A. TILLIT JR. LICENSE No. 44167 STATE OF FLORIDA PROFESSIONAL ENGINEER

P.E. SEAL/SIGNATURE/DATE

HR-251 SINGLE SPAN MULLION

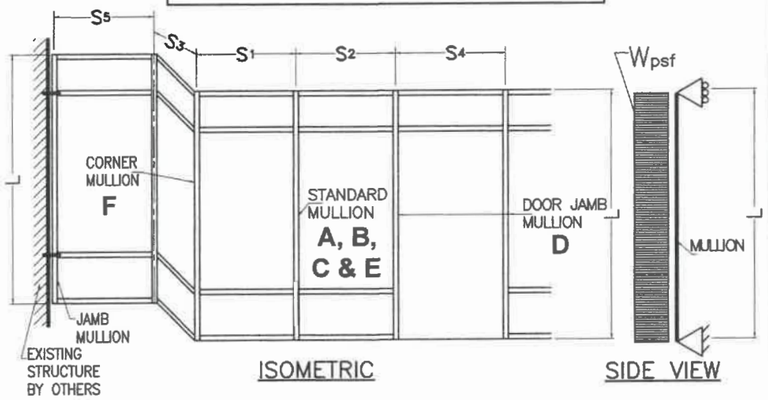

L = MULLION SPAN ; S1, S2, S3, S4 & S5 = MULLION SPACING

EFFECTIVE SPACING (FOR STANDARD MULLION) $b = \frac{S_1 + S_2}{2}$

EFFECTIVE SPACING (FOR CORNER MULLION) $b = \frac{S_1 + S_3}{2}$

EFFECTIVE SPACING (FOR DOOR JAMB MULLION) $b = \frac{S_2 + S_4}{2}$

EFFECTIVE SPACING (FOR JAMB MULLION) $b = \frac{S_5}{2}$

CASE DEFINITIONS

CASE 1 : SINGLE SPAN UNREINFORCED STANDARD MULLION **A** (SEE DET. 5/21)

CASE 2 : SINGLE SPAN REINFORCED STANDARD MULLION **B** FULL HEIGHT. (SEE DET. 4/21)

CASE 3 : SINGLE SPAN HEAVILY REINFORCED STANDARD MULLION **C** FULL HEIGHT. (SEE DET. 4A/21)

CASE 4 : SINGLE SPAN UNREINFORCED STANDARD HEAVY MULLION **E** (SEE DET. 11/21)

CASE 5 : SINGLE SPAN REINFORCED DOOR MULLION **F** FULL HEIGHT. (SEE DET. 7/36)

CASE 6 : SINGLE SPAN REINFORCED CORNER MULLION **G** FULL HEIGHT. (SEE DET. 14/23)

* MAXIMUM A.S.D. DESIGN PRESSURE RATING FOR STANDARD, DOOR JAMB & CORNER MULLION WILL AUTOMATICALLY QUALIFY A.S.D. DESIGN PRESSURE RATINGS FOR JAMBS FOR ANY GIVEN MULLION SPACING. MAXIMUM JAMB SPAN (DISTANCE BETWEEN ANCHORAGE POINTS) IS 96", AND JAMB ANCHORAGE SHALL BE PERFORMED AT HORIZONTAL RAIL LOCATIONS (EXCEPT AT EXPANSION HORIZONTAL RAILS).

A — CASE:1 — LIGHT MULLION (14) + (15) — Ix= 10.513 in4, Sx= 2.7174 in3 — IN TERMS OF ALUM.

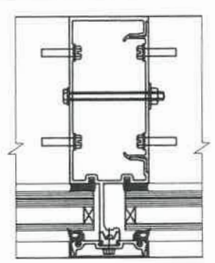

B — CASE:2 — LIGHT MULLION (14) + (15) W/ STEEL CHANNEL (53) — Ix= 28.526 in4, Sx= 6.6447 in3 — IN TERMS OF ALUM.

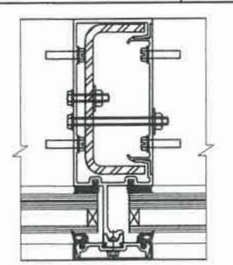

C — CASE:3 — LIGHT MULLION (14) + (15) W/ STEEL CHANNEL (53) & 3/8"x4" STEEL BAR (51) — Ix= 34.571 in4, Sx= 7.9639 in3 — IN TERMS OF ALUM.

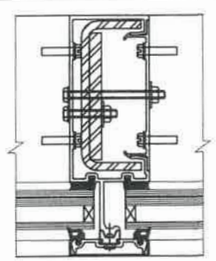

E — CASE:4 — HEAVY MULLION (15) + (18) — Ix= 14.664 in4, Sx= 3.6363 in3 — IN TERMS OF ALUM.

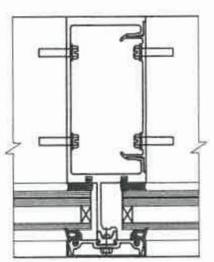

F — CASE:5 — LIGHT MULLION (14) + (15) W/ STEEL CHANNEL (53) & 3/4"x4" STEEL BAR (52) — Ix= 40.604 in4, Sx= 9.2970 in3 — IN TERMS OF ALUM.

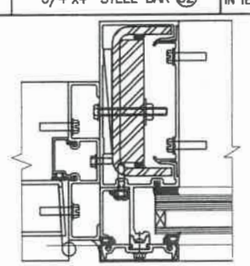

G — CASE:6 — CORNER MULLION (25) + (26) W/ STEEL CHANNEL (50) — Ix= 31.499 in4, Sx= 7.4308 in3 — IN TERMS OF ALUM.

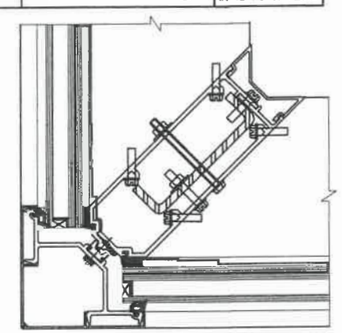

MAXIMUM A.S.D. DESIGN PRESSURE RATING FOR STANDARD, DOOR JAMB & CORNER MULLIONS *
MAXIMUM MULLION SPAN "L"(FT) SCHEDULE FOR A GIVEN A.S.D. DESIGN PRESSURE RATING (psf) AND A GIVEN MULLION EFFECTIVE SPACING "b"

MAXIMUM A.S.D. DESIGN PRESSURE RATING (psf)	EFFECTIVE SPACING "b" (ft-in)	SINGLE SPAN MULLIONS CASE 1 MULLION: A "L" (ft-in)	CASE 2 MULLION: B "L" (ft-in)	CASE 3 MULLION: C "L" (FT-in)	CASE 4 MULLION: E "L" (FT-in)	CASE 5 MULLION: F "L" (FT-in)	CASE 6 MULLION: G "L" (FT-in)
60.0	3 '- 6 "	10 '- 0 "	12 '- 6 "	12 '- 6 "	10 '- 0 "	12 '- 6 "	12 '- 6 "
	4 '- 0 "	10 '- 0 "	12 '- 6 "	12 '- 6 "	10 '- 0 "	12 '- 6 "	12 '- 6 "
	4 '- 6 "	9 '- 8 "	12 '- 6 "	12 '- 6 "	10 '- 0 "	12 '- 6 "	12 '- 6 "
	5 '- 0 "	8 '- 8 "	12 '- 6 "	12 '- 6 "	10 '- 0 "	12 '- 6 "	12 '- 6 "
	5 '- 6 "	7 '- 11 "	12 '- 6 "	12 '- 6 "	10 '- 0 "	12 '- 6 "	12 '- 6 "
	6 '- 0 "	7 '- 3 "	12 '- 6 "	12 '- 6 "	9 '- 11 "	12 '- 6 "	12 '- 6 "
65.0	3 '- 6 "	10 '- 0 "	12 '- 6 "	12 '- 6 "	10 '- 0 "	12 '- 6 "	12 '- 6 "
	4 '- 0 "	10 '- 0 "	12 '- 6 "	12 '- 6 "	10 '- 0 "	12 '- 6 "	12 '- 6 "
	4 '- 6 "	8 '- 11 "	12 '- 6 "	12 '- 6 "	10 '- 0 "	12 '- 6 "	12 '- 6 "
	5 '- 0 "	8 '- 0 "	12 '- 6 "	12 '- 6 "	10 '- 0 "	12 '- 6 "	12 '- 6 "
	5 '- 6 "	7 '- 3 "	12 '- 6 "	12 '- 6 "	10 '- 0 "	12 '- 6 "	12 '- 6 "
	6 '- 0 "	6 '- 8 "	11 '- 8 "	12 '- 6 "	9 '- 2 "	12 '- 6 "	12 '- 6 "
70.0	3 '- 6 "	-	12 '- 6 "	12 '- 6 "	10 '- 0 "	12 '- 6 "	12 '- 6 "
	4 '- 0 "	-	12 '- 6 "	12 '- 6 "	10 '- 0 "	12 '- 6 "	12 '- 6 "
	4 '- 6 "	-	12 '- 6 "	12 '- 6 "	10 '- 0 "	12 '- 6 "	12 '- 6 "
	5 '- 0 "	-	12 '- 6 "	12 '- 6 "	10 '- 0 "	12 '- 6 "	12 '- 6 "
	5 '- 6 "	-	11 '- 10 "	12 '- 6 "	9 '- 3 "	12 '- 6 "	12 '- 6 "
	6 '- 0 "	-	10 '- 10 "	12 '- 6 "	8 '- 6 "	12 '- 6 "	12 '- 6 "
75.0	3 '- 6 "	-	12 '- 6 "	12 '- 6 "	10 '- 0 "	12 '- 6 "	12 '- 6 "
	4 '- 0 "	-	12 '- 6 "	12 '- 6 "	10 '- 0 "	12 '- 6 "	12 '- 6 "
	4 '- 6 "	-	12 '- 6 "	12 '- 6 "	10 '- 0 "	12 '- 6 "	12 '- 6 "
	5 '- 0 "	-	12 '- 2 "	12 '- 6 "	9 '- 6 "	12 '- 6 "	12 '- 6 "
	5 '- 6 "	-	11 '- 1 "	12 '- 6 "	8 '- 8 "	12 '- 6 "	12 '- 6 "
	6 '- 0 "	-	10 '- 2 "	12 '- 3 "	7 '- 11 "	12 '- 6 "	12 '- 6 "
76.0	3 '- 6 "	-	12 '- 6 "	12 '- 6 "	10 '- 0 "	12 '- 6 "	12 '- 6 "
	4 '- 0 "	-	12 '- 6 "	12 '- 6 "	10 '- 0 "	12 '- 6 "	12 '- 6 "
	4 '- 6 "	-	12 '- 6 "	12 '- 6 "	10 '- 0 "	12 '- 6 "	12 '- 6 "
	5 '- 0 "	-	12 '- 0 "	12 '- 6 "	9 '- 5 "	12 '- 6 "	12 '- 6 "
	5 '- 6 "	-	10 '- 11 "	12 '- 6 "	8 '- 6 "	12 '- 6 "	12 '- 6 "
	6 '- 0 "	-	10 '- 0 "	12 '- 1 "	7 '- 10 "	12 '- 6 "	12 '- 4 "
80.0	3 '- 6 "	-	12 '- 6 "	12 '- 6 "	-	12 '- 6 "	12 '- 6 "
	4 '- 0 "	-	12 '- 6 "	12 '- 6 "	-	12 '- 6 "	12 '- 6 "
	4 '- 6 "	-	12 '- 6 "	12 '- 6 "	-	12 '- 6 "	12 '- 6 "
	5 '- 0 "	-	11 '- 5 "	12 '- 6 "	-	12 '- 6 "	12 '- 6 "
	5 '- 6 "	-	10 '- 4 "	12 '- 6 "	-	12 '- 6 "	12 '- 6 "
	6 '- 0 "	-	9 '- 6 "	11 '- 6 "	-	12 '- 6 "	11 '- 9 "
85.0	3 '- 6 "	-	12 '- 6 "	12 '- 6 "	-	12 '- 6 "	12 '- 6 "
	4 '- 0 "	-	12 '- 6 "	12 '- 6 "	-	12 '- 6 "	12 '- 6 "
	4 '- 6 "	-	11 '- 11 "	12 '- 6 "	-	12 '- 6 "	12 '- 6 "
	5 '- 0 "	-	10 '- 9 "	12 '- 6 "	-	12 '- 6 "	12 '- 6 "
	5 '- 6 "	-	9 '- 9 "	11 '- 9 "	-	12 '- 6 "	12 '- 0 "
	6 '- 0 "	-	8 '- 11 "	10 '- 9 "	-	12 '- 4 "	11 '- 0 "
90.0	3 '- 6 "	-	12 '- 6 "	12 '- 6 "	-	12 '- 6 "	12 '- 6 "
	4 '- 0 "	-	12 '- 6 "	12 '- 6 "	-	12 '- 6 "	12 '- 6 "
	4 '- 6 "	-	11 '- 3 "	12 '- 6 "	-	12 '- 6 "	12 '- 6 "
	5 '- 0 "	-	10 '- 2 "	12 '- 3 "	-	12 '- 6 "	12 '- 6 "
	5 '- 6 "	-	9 '- 3 "	11 '- 1 "	-	12 '- 6 "	11 '- 4 "
	6 '- 0 "	-	8 '- 5 "	10 '- 2 "	-	11 '- 8 "	10 '- 5 "
95.0	3 '- 6 "	-	12 '- 6 "	12 '- 6 "	-	-	-
	4 '- 0 "	-	12 '- 0 "	12 '- 6 "	-	-	-
	4 '- 6 "	-	10 '- 8 "	12 '- 6 "	-	-	-
	5 '- 0 "	-	9 '- 7 "	11 '- 7 "	-	-	-
	5 '- 6 "	-	8 '- 9 "	10 '- 6 "	-	-	-
	6 '- 0 "	-	8 '- 0 "	9 '- 8 "	-	-	-
100.0	3 '- 6 "	-	12 '- 6 "	12 '- 6 "	-	-	-
	4 '- 0 "	-	11 '- 5 "	12 '- 6 "	-	-	-
	4 '- 6 "	-	10 '- 2 "	12 '- 3 "	-	-	-
	5 '- 0 "	-	9 '- 2 "	11 '- 0 "	-	-	-
	5 '- 6 "	-	8 '- 4 "	10 '- 0 "	-	-	-
	6 '- 0 "	-	7 '- 7 "	9 '- 2 "	-	-	-

FLORIDA BUILDING CODE (High & Non High Velocity Hurricane Zone)

HR-251 CAPTURED CURTAIN WALL SYSTEM
LARGE & SMALL MISSILE IMPACT INSULATED GLASS

M.P
DRAWN BY

04/15/2021
DATE

21-058
DRAWING No

SHEET 9 OF 36

Oldcastle BuildingEnvelope™
803 Airport Rd - Terrell, TX 75160
www.OldcastleBE.com - Phone 800-869-4567

REV. No	DESCRIPTION	DATE
1	OLD 18-032	04/16/21
2		
3		
4		

REV. No	DESCRIPTION	DATE

©2021 TILTECO, INC

TILTECO INC
TILLIT TESTING & ENGINEERING COMPANY
6355 N.W. 36th. St., Ste. 305, VIRGINIA GARDENS, FLORIDA 33166
Phone : (305)871-1530 . Fax : (305)871-1531
e-mail: tilteco@aol.com
CA-0006719
WALTER A. TILLIT JR., P.E.
FLORIDA Lic. # 44167

WALTER A. TILLIT JR. LICENSE No. 44167 STATE OF FLORIDA PROFESSIONAL ENGINEER

P.E. SEAL/SIGNATURE/DATE

HR-251 TWIN SPAN MULLION

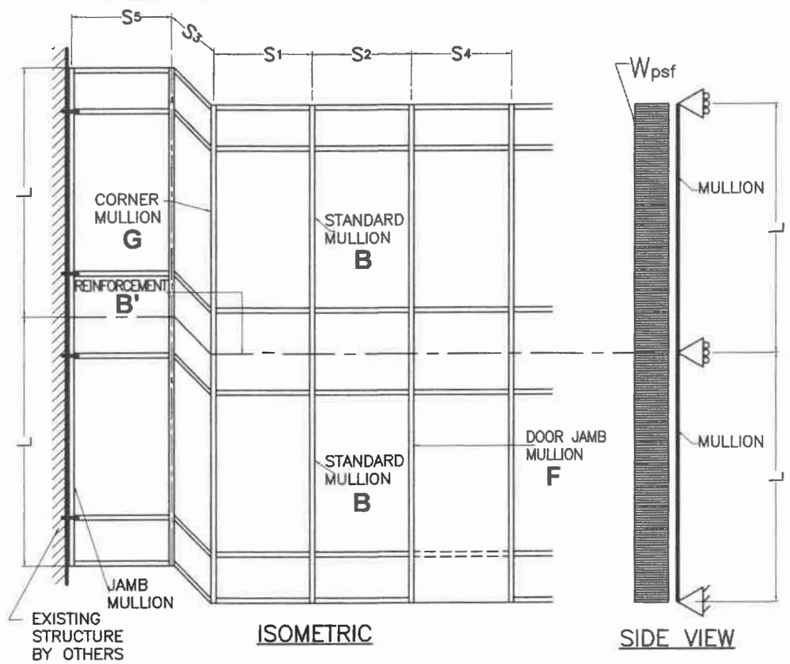

ISOMETRIC

SIDE VIEW

CASE DEFINITIONS

CASE 7 : TWIN SPAN REINFORCED STANDARD MULLION **B** FULL HEIGHT. (SEE DET. 4/21) W/ REQUIRED 76" LONG ADDITIONAL REINFORCEMENT **B'** AT DEAD AND WIND LOAD ANCHOR LOCATION SEE SHEET 11.

CASE 8 : TWIN SPAN REINFORCED CORNER MULLION **G** FULL HEIGHT. (SEE DET. 14/23)

CASE 9 : REINFORCED DOOR JAMB MULLION **F** FULL HEIGHT. (SEE DET. 7/36)

L = MULLION SPAN ; S1, S2, S3, S4 & S5 = MULLION SPACING

EFFECTIVE SPACING $b = \frac{S_1 + S_2}{2}$ (FOR STANDARD MULLION)

EFFECTIVE SPACING $b = \frac{S_1 + S_3}{2}$ (FOR CORNER MULLION)

EFFECTIVE SPACING $b = \frac{S_2 + S_4}{2}$ (FOR DOOR JAMB MULLION)

EFFECTIVE SPACING $b = \frac{S_5}{2}$ (FOR JAMB MULLION)

B	CASE:7 LIGHT MULLION (14) + (15) W/ STEEL CHANNEL (53)	Ix= 34.942 in4 Sx= 7.748 in3 IN TERMS OF ALUM.

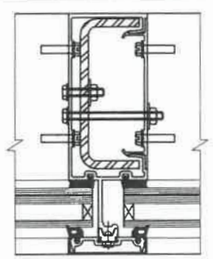

REINFORCEMENT B'	CASE:7' (AT DEAD LOAD & WIND ANCHOR LOCATION) FOR B WITH 3/8"x4" STEEL BAR (51)	Ix= 41.220 in4 Sx= 8.922 in3 IN TERMS OF ALUM.

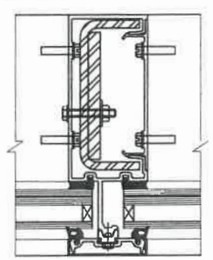

G	CASE:8 CORNER MULLION (25) + (26) W/ STEEL CHANNEL (50)	Ix= 31.499 in4 Sx= 7.4308 in3 IN TERMS OF ALUM.

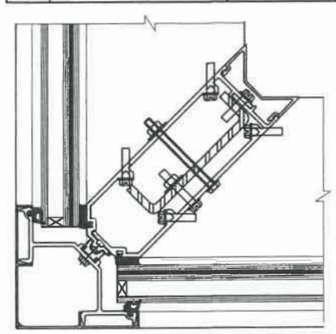

F	CASE:9 ◊ LIGHT MULLION (14) + (15) W/ STEEL CHANNEL (53) & 3/4"x4" STEEL BAR (52)	Ix= 40.604 in4 Sx= 9.2970 in3 IN TERMS OF ALUM.

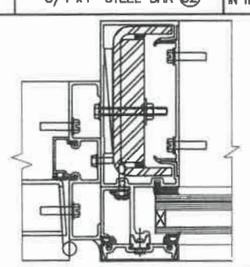

◊ THIS MULLION SHALL BE USED FULL HEIGHT, i.e. ON BOTH SPANS OF THE TWIN SPAN CONDITION.

* MAXIMUM A.S.D. DESIGN PRESSURE RATING FOR STANDARD, DOOR JAMB & CORNER MULLION WILL AUTOMATICALLY QUALIFY A.S.D. DESIGN PRESSURE RATINGS FOR JAMBS FOR ANY GIVEN MULLION SPACING. MAXIMUM JAMB SPAN (DISTANCE BETWEEN ANCHORAGE POINTS) IS 84", AND JAMB ANCHORAGE SHALL BE PERFORMED AT HORIZONTAL LOCATIONS (EXCEPT AT EXPANSION HORIZONTALS).

MAXIMUM A.S.D. DESIGN PRESSURE RATING FOR STANDARD, DOOR JAMB & CORNER MULLIONS *
MAXIMUM MULLION SPAN "L"(FT) SCHEDULE FOR A GIVEN A.S.D. DESIGN PRESSURE RATING (psf) AND A GIVEN MULLION EFFECTIVE SPACING "b"

MAXIMUM A.S.D. DESIGN PRESSURE RATING (p.s.f.)	EFFECTIVE SPACING "b" (ft-in)	TWIN SPAN MULLIONS CASE 7 MULLION: B "L" (ft-in)	CASE 8 MULLION: G "L" (ft-in)	CASE 9 ◊ MULLION: F "L" (ft-in)
60.0	3 '- 6 "	12 '- 6 "	12 '- 6 "	12 '- 6 "
	4 '- 0 "	12 '- 6 "	12 '- 6 "	12 '- 6 "
	4 '- 6 "	12 '- 6 "	12 '- 6 "	12 '- 6 "
	5 '- 0 "	12 '- 6 "	12 '- 6 "	12 '- 6 "
	5 '- 6 "	12 '- 6 "	12 '- 6 "	12 '- 6 "
65.0	3 '- 6 "	12 '- 6 "	12 '- 6 "	12 '- 6 "
	4 '- 0 "	12 '- 6 "	12 '- 6 "	12 '- 6 "
	4 '- 6 "	12 '- 6 "	12 '- 6 "	12 '- 6 "
	5 '- 0 "	12 '- 6 "	12 '- 6 "	12 '- 6 "
	5 '- 6 "	12 '- 6 "	12 '- 6 "	12 '- 6 "
70.0	3 '- 6 "	12 '- 6 "	12 '- 6 "	12 '- 6 "
	4 '- 0 "	12 '- 6 "	12 '- 6 "	12 '- 6 "
	4 '- 6 "	12 '- 6 "	12 '- 6 "	12 '- 6 "
	5 '- 0 "	12 '- 6 "	12 '- 6 "	12 '- 6 "
	5 '- 6 "	12 '- 6 "	12 '- 6 "	12 '- 6 "
75.0	3 '- 6 "	12 '- 6 "	12 '- 6 "	12 '- 6 "
	4 '- 0 "	12 '- 6 "	12 '- 6 "	12 '- 6 "
	4 '- 6 "	12 '- 6 "	12 '- 6 "	12 '- 6 "
	5 '- 0 "	12 '- 6 "	12 '- 6 "	12 '- 6 "
	5 '- 6 "	12 '- 6 "	12 '- 6 "	12 '- 6 "
76.0	3 '- 6 "	12 '- 6 "	12 '- 6 "	12 '- 6 "
	4 '- 0 "	12 '- 6 "	12 '- 6 "	12 '- 6 "
	4 '- 6 "	12 '- 6 "	12 '- 6 "	12 '- 6 "
	5 '- 0 "	12 '- 6 "	12 '- 6 "	12 '- 6 "
	5 '- 6 "	12 '- 6 "	12 '- 6 "	12 '- 6 "
80.0	3 '- 6 "	12 '- 6 "	12 '- 6 "	12 '- 6 "
	4 '- 0 "	12 '- 6 "	12 '- 6 "	12 '- 6 "
	4 '- 6 "	12 '- 6 "	12 '- 6 "	12 '- 6 "
	5 '- 0 "	12 '- 6 "	12 '- 6 "	12 '- 6 "
	5 '- 6 "	12 '- 6 "	12 '- 6 "	12 '- 6 "
85.0	3 '- 6 "	12 '- 6 "	12 '- 6 "	12 '- 6 "
	4 '- 0 "	12 '- 6 "	12 '- 6 "	12 '- 6 "
	4 '- 6 "	12 '- 6 "	12 '- 6 "	12 '- 6 "
	5 '- 0 "	12 '- 6 "	12 '- 6 "	12 '- 6 "
	5 '- 6 "	12 '- 0 "	12 '- 3 "	12 '- 6 "
90.0	3 '- 6 "	12 '- 6 "	12 '- 6 "	12 '- 6 "
	4 '- 0 "	12 '- 6 "	12 '- 6 "	12 '- 6 "
	4 '- 6 "	12 '- 6 "	12 '- 6 "	12 '- 6 "
	5 '- 0 "	12 '- 6 "	12 '- 6 "	12 '- 6 "
	5 '- 6 "	11 '- 4 "	11 '- 11 "	12 '- 6 "
95.0	3 '- 6 "	-	-	-
	4 '- 0 "	-	-	-
	4 '- 6 "	-	-	-
	5 '- 0 "	-	-	-
	5 '- 6 "	-	-	-
100.0	3 '- 6 "	-	-	-
	4 '- 0 "	-	-	-
	4 '- 6 "	-	-	-
	5 '- 0 "	-	-	-
	5 '- 6 "	-	-	-

FLORIDA BUILDING CODE (High & Non High Velocity Hurricane Zone)

M.P DRAWN BY

04/15/2021 DATE

21-058 DRAWING No

SHEET 10 OF 36

HR-251 CAPTURED CURTAIN WALL SYSTEM
LARGE & SMALL MISSILE IMPACT INSULATED GLASS

Oldcastle BuildingEnvelope™
803 Airport Rd - Terrell, TX 75160
www.OldcastleBE.com - Phone 800-869-4567

REV. No	DESCRIPTION	DATE	REV. No	DESCRIPTION	DATE
1	OLD 18-032	04/15/21	3		
2			4		

©2021 TILTECO, INC

TILTECO INC.
TILLIT TESTING & ENGINEERING COMPANY
6355 N.W. 36th. St., Ste. 305, VIRGINIA GARDENS, FLORIDA 33166
Phone : (305)871-1530 . Fax : (305)871-1531
e-mail: tilteco@aol.com
CA-0006719
WALTER A. TILLIT Jr., P.E.
FLORIDA Lic. # 44167

WALTER A. TILLIT JR. LICENSED No. 44167 STATE OF FLORIDA PROFESSIONAL ENGINEER

P.E. SEAL/SIGNATURE/DATE

OPTIONS FOR TWIN SPAN STANDARD AND CORNER MULLIONS INSTALLATION FOR HR-251 CURTAIN WALL SYSTEM

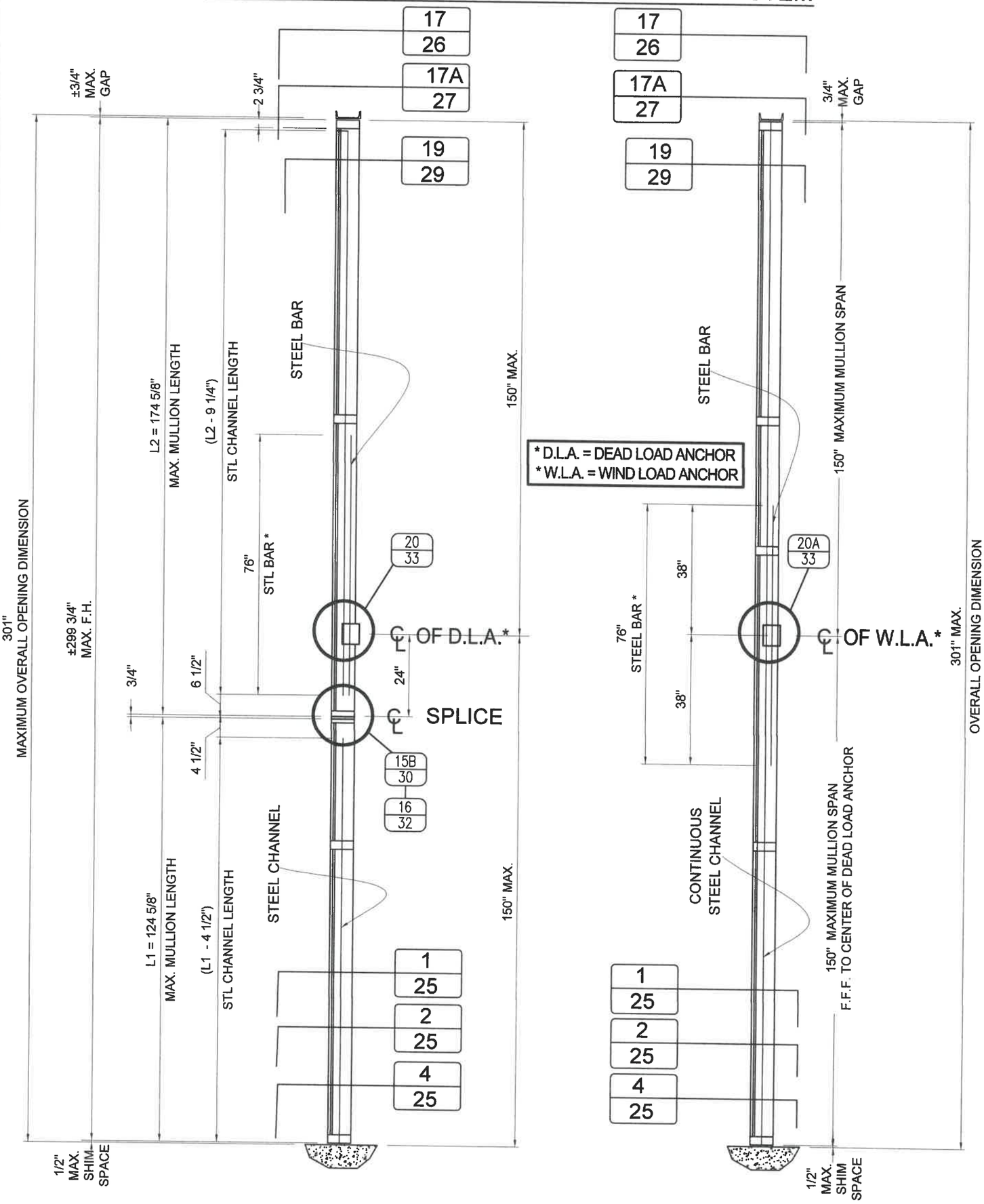

OPTION # 1
MULLION W/ SPLICE

OPTION # 2:
CONTINUOUS MULLION W/O SPLICE

* STEEL BAR NOT REQUIRED AT CORNER MULLION

WALTER A. TILLIT JR. LICENSE No. 44167 STATE OF FLORIDA PROFESSIONAL ENGINEER

4/16/2021

P.E. SEAL/SIGNATURE/DATE

FLORIDA BUILDING CODE (High & Non High Velocity Hurricane Zone)

©2021 TILTECO, INC

TILTECO INC.
TILLIT TESTING & ENGINEERING COMPANY
6355 N.W. 36th. St., Ste. 305, VIRGINIA GARDENS, FLORIDA 33166
Phone : (305)871-1530 . Fax : (305)871-1531
e-mail: tilteco@aol.com
CA-0006719
WALTER A. TILLIT Jr., P.E.
FLORIDA Lic. # 44167

HR-251 CAPTURED CURTAIN WALL SYSTEM
LARGE & SMALL MISSILE IMPACT INSULATED GLASS

Oldcastle BuildingEnvelope™
803 Airport Rd - Terrell, TX 75160
www.OldcastleBE.com - Phone 800-869-4567

REV. No	DESCRIPTION	DATE	REV. No	DESCRIPTION	DATE
1	OLD 18-032	04/15/21	3		
2			4		

M.P
DRAWN BY

04/15/2021
DATE

21-058
DRAWING No

SHEET 11 OF 36

MAXIMUM A.S.D. DESIGN PRESSURE RATING FOR SINGLE SPAN & TWIN SPAN (AS APPLICABLE) MULLION CONNECTIONS (SEE ALSO SHEET 13)

SINGLE SPAN MULLION: HEAD & SILL CONNECTION *

MAXIMUM MULLION SPAN	EFFECTIVE SPACING	MAXIMUM A.S.D. DESIGN PRESSURE RATING (psf)			
		POURED CONCRETE (Min. f'c = 3ksi) SUBSTRATE			1/4" Min. THK ASTM A-36 STEEL SUBSTRATE
		FASTENERS TYPES			FASTENERS
"L" (ft-in)	"b" (ft-in)	A	B	C	D
	3'-6"	100.0	100.0	100.0	100.0
	4'-0"	100.0	100.0	100.0	100.0
8'-5"	4'-6"	100.0	100.0	100.0	100.0
	5'-0"	100.0	100.0	100.0	100.0
	5'-6"	100.0	100.0	100.0	100.0
	6'-0"	100.0	100.0	100.0	100.0
	3'-6"	100.0	100.0	100.0	100.0
	4'-0"	100.0	100.0	100.0	100.0
8'-6"	4'-6"	100.0	100.0	100.0	100.0
	5'-0"	100.0	100.0	100.0	100.0
	5'-6"	100.0	100.0	100.0	100.0
	6'-0"	100.0	100.0	100.0	100.0
	3'-6"	100.0	100.0	100.0	100.0
	4'-0"	100.0	100.0	100.0	100.0
9'-0"	4'-6"	100.0	100.0	100.0	100.0
	5'-0"	100.0	100.0	100.0	100.0
	5'-6"	100.0	100.0	100.0	100.0
	6'-0"	100.0	100.0	100.0	100.0
	3'-6"	100.0	100.0	100.0	100.0
	4'-0"	100.0	100.0	100.0	100.0
9'-6"	4'-6"	100.0	100.0	100.0	100.0
	5'-0"	100.0	100.0	100.0	100.0
	5'-6"	100.0	100.0	100.0	100.0
	6'-0"	100.0	100.0	97.1	100.0
	3'-6"	100.0	100.0	100.0	100.0
	4'-0"	100.0	100.0	100.0	100.0
10'-0"	4'-6"	100.0	100.0	100.0	100.0
	5'-0"	100.0	100.0	100.0	100.0
	5'-6"	100.0	100.0	100.0	100.0
	6'-0"	100.0	100.0	92.2	100.0
	3'-6"	100.0	100.0	100.0	100.0
	4'-0"	100.0	100.0	100.0	100.0
10'-6"	4'-6"	100.0	100.0	100.0	100.0
	5'-0"	100.0	100.0	100.0	100.0
	5'-6"	100.0	100.0	95.8	100.0
	6'-0"	100.0	100.0	87.8	100.0
	3'-6"	100.0	100.0	100.0	100.0
	4'-0"	100.0	100.0	100.0	100.0
11'-0"	4'-6"	100.0	100.0	100.0	100.0
	5'-0"	100.0	100.0	100.0	100.0
	5'-6"	100.0	100.0	91.5	100.0
	6'-0"	100.0	100.0	83.8	99.6
	3'-6"	100.0	100.0	100.0	100.0
	4'-0"	100.0	100.0	100.0	100.0
11'-6"	4'-6"	100.0	100.0	100.0	100.0
	5'-0"	100.0	100.0	96.2	100.0
	5'-6"	100.0	100.0	87.5	100.0
	6'-0"	100.0	100.0	80.2	95.3
	3'-6"	100.0	100.0	100.0	100.0
	4'-0"	100.0	100.0	100.0	100.0
12'-0"	4'-6"	100.0	100.0	100.0	100.0
	5'-0"	100.0	100.0	92.2	100.0
	5'-6"	100.0	100.0	83.8	99.6
	6'-0"	97.4	96.4	76.8	91.3
	3'-6"	100.0	100.0	100.0	100.0
	4'-0"	100.0	100.0	100.0	100.0
12'-6"	4'-6"	100.0	100.0	98.4	100.0
	5'-0"	100.0	100.0	88.5	100.0
	5'-6"	100.0	100.0	80.5	95.7
	6'-0"	93.5	92.6	73.8	87.7

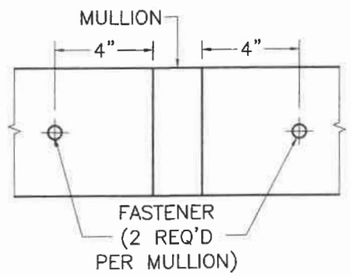

EXTERIOR

SCHEMATIC CONNECTION DETAIL*

* SEE CONNECTION DETAILS ON SHEETS 18 & 25 FOR FASTENERS QUANTITY & LOCATIONS AT MULLION. THIS SCHEDULE IS ONLY VALID FOR LARGE MISSILE ZONE INSTALLATION

B FASTENERS TYPES REQUIREMENTS

A - 1/2"Ø HILTI KWIK BOLT TZ ANCHOR W/ 3 1/4" Min. EMBEDMENT INTO 8" Min. THICK POURED CONCRETE (Min. f'c = 3 ksi) BEYOND ANY FINISH MATERIAL, W/ 6" MIN. EDGE DISTANCE.

B - 1/2"Ø HILTI KWIK BOLT TZ ANCHOR W/ 3 1/4" Min. EMBEDMENT INTO 6" Min. THICK POURED CONCRETE (Min. f'c = 3 ksi) BEYOND ANY FINISH MATERIAL, W/ 7 1/2" MIN. EDGE DISTANCE.

C - 1/2"Ø HILTI HUS-H SCREW ANCHOR W/ 3" Min. EMBEDMENT INTO 4" Min. THICK POURED CONCRETE (Min. f'c = 3 ksi) BEYOND ANY FINISH MATERIAL, W/ 3 3/4" MIN. EDGE DISTANCE.

D - 1/2"Ø-13 TYPE "F" GRADE 5 BOLT TO 1/4" MIN. THK. ASTM A-36 STEEL W/ 1" Min. EDGE DISTANCE OR 1/2"Ø -13 SAE GALVANIZED STEEL GRADE 5 HHB THRU BOLT W/ NUT & LOCK WASHER TO 1/4" Min. THK. ASTM A-36 STEEL W/ 1" MIN. EDGE DISTANCE.

** THIS SCHEDULE ONLY VALID FOR SMALL MISSILE ZONE INSTALLATION

TWIN SPAN MULLION: SILL CONNECTION *

MAXIMUM MULLION SPAN	EFFECTIVE SPACING	MAXIMUM A.S.D. DESIGN PRESSURE RATING (psf)			
		POURED CONCRETE (Min. f'c = 3ksi) SUBSTRATE			1/4" Min. THK ASTM A-36 STEEL SUBSTRATE
		FASTENERS TYPES			FASTENERS
"L" (ft-in)	"b" (ft-in)	A	B	C	D
	3'-6"	90.0	90.0	90.0	90.0
	4'-0"	90.0	90.0	90.0	90.0
8'-5"	4'-6"	90.0	90.0	90.0	90.0
	5'-0"	90.0	90.0	90.0	90.0
	5'-6"	90.0	90.0	90.0	90.0
	6'-0"	90.0	90.0	90.0	90.0
	3'-6"	90.0	90.0	90.0	90.0
	4'-0"	90.0	90.0	90.0	90.0
8'-6"	4'-6"	90.0	90.0	90.0	90.0
	5'-0"	90.0	90.0	90.0	90.0
	5'-6"	90.0	90.0	90.0	90.0
	6'-0"	90.0	90.0	90.0	90.0
	3'-6"	90.0	90.0	90.0	90.0
	4'-0"	90.0	90.0	90.0	90.0
9'-0"	4'-6"	90.0	90.0	90.0	90.0
	5'-0"	90.0	90.0	90.0	90.0
	5'-6"	90.0	90.0	90.0	90.0
	6'-0"	90.0	90.0	90.0	90.0
	3'-6"	90.0	90.0	90.0	90.0
	4'-0"	90.0	90.0	90.0	90.0
9'-6"	4'-6"	90.0	90.0	90.0	90.0
	5'-0"	90.0	90.0	90.0	90.0
	5'-6"	90.0	90.0	90.0	90.0
	6'-0"	90.0	90.0	90.0	90.0
	3'-6"	90.0	90.0	90.0	90.0
	4'-0"	90.0	90.0	90.0	90.0
10'-0"	4'-6"	90.0	90.0	90.0	90.0
	5'-0"	90.0	90.0	90.0	90.0
	5'-6"	90.0	90.0	90.0	90.0
	6'-0"	90.0	90.0	90.0	90.0
	3'-6"	90.0	90.0	90.0	90.0
	4'-0"	90.0	90.0	90.0	90.0
10'-6"	4'-6"	90.0	90.0	90.0	90.0
	5'-0"	90.0	90.0	90.0	90.0
	5'-6"	90.0	90.0	90.0	90.0
	6'-0"	90.0	90.0	87.8	90.0
	3'-6"	90.0	90.0	90.0	90.0
	4'-0"	90.0	90.0	90.0	90.0
11'-0"	4'-6"	90.0	90.0	90.0	90.0
	5'-0"	90.0	90.0	90.0	90.0
	5'-6"	90.0	90.0	90.0	90.0
	6'-0"	90.0	90.0	83.8	90.0
	3'-6"	90.0	90.0	90.0	90.0
	4'-0"	90.0	90.0	90.0	90.0
11'-6"	4'-6"	90.0	90.0	90.0	90.0
	5'-0"	90.0	90.0	90.0	90.0
	5'-6"	90.0	90.0	87.5	90.0
	6'-0"	90.0	90.0	80.2	90.0
	3'-6"	90.0	90.0	90.0	90.0
	4'-0"	90.0	90.0	90.0	90.0
12'-0"	4'-6"	90.0	90.0	90.0	90.0
	5'-0"	90.0	90.0	90.0	90.0
	5'-6"	90.0	90.0	83.8	90.0
	6'-0"	90.0	90.0	76.8	90.0
	3'-6"	90.0	90.0	90.0	90.0
	4'-0"	90.0	90.0	90.0	90.0
12'-6"	4'-6"	90.0	90.0	90.0	90.0
	5'-0"	90.0	90.0	88.5	90.0
	5'-6"	90.0	90.0	80.5	90.0
	6'-0"	90.0	90.0	73.8	87.7

SINGLE & TWIN SPAN MULLION: HEAD & SILL CONNECTION **

MAXIMUM MULLION SPAN	EFFECTIVE SPACING	MAXIMUM A.S.D. DESIGN PRESSURE RATING (psf)			
		POURED CONCRETE (Min. f'c = 3ksi) SUBSTRATE			1/4" Min. THK ASTM A-36 STEEL SUBSTRATE
		FASTENERS TYPES			FASTENERS
"L" (ft-in)	"b" (ft-in)	A	B	C	D
	3'-6"	90.0	90.0	90.0	90.0
	4'-0"	90.0	90.0	90.0	90.0
8'-5"	4'-6"	90.0	90.0	90.0	90.0
	5'-0"	90.0	90.0	90.0	90.0
	5'-6"	90.0	90.0	90.0	90.0
	6'-0"	90.0	90.0	90.0	90.0
	3'-6"	90.0	90.0	90.0	90.0
	4'-0"	90.0	90.0	90.0	90.0
8'-6"	4'-6"	90.0	90.0	90.0	90.0
	5'-0"	90.0	90.0	90.0	90.0
	5'-6"	90.0	90.0	90.0	90.0
	6'-0"	90.0	90.0	90.0	90.0
	3'-6"	90.0	90.0	90.0	90.0
	4'-0"	90.0	90.0	90.0	90.0
9'-0"	4'-6"	90.0	90.0	90.0	90.0
	5'-0"	90.0	90.0	90.0	90.0
	5'-6"	90.0	90.0	90.0	90.0
	6'-0"	90.0	90.0	90.0	90.0
	3'-6"	90.0	90.0	90.0	90.0
	4'-0"	90.0	90.0	90.0	90.0
9'-6"	4'-6"	90.0	90.0	90.0	90.0
	5'-0"	90.0	90.0	90.0	90.0
	5'-6"	90.0	90.0	90.0	90.0
	6'-0"	90.0	90.0	90.0	90.0
	3'-6"	90.0	90.0	90.0	90.0
	4'-0"	90.0	90.0	90.0	90.0
10'-0"	4'-6"	90.0	90.0	90.0	90.0
	5'-0"	90.0	90.0	90.0	90.0
	5'-6"	90.0	90.0	90.0	90.0
	6'-0"	90.0	90.0	90.0	90.0
	3'-6"	90.0	90.0	90.0	90.0
	4'-0"	90.0	90.0	90.0	90.0
10'-6"	4'-6"	90.0	90.0	90.0	90.0
	5'-0"	90.0	90.0	90.0	90.0
	5'-6"	90.0	90.0	90.0	90.0
	6'-0"	90.0	90.0	90.0	90.0
	3'-6"	90.0	90.0	90.0	90.0
	4'-0"	90.0	90.0	90.0	90.0
11'-0"	4'-6"	90.0	90.0	90.0	90.0
	5'-0"	90.0	90.0	90.0	90.0
	5'-6"	90.0	90.0	90.0	90.0
	6'-0"	90.0	90.0	83.8	90.0
	3'-6"	90.0	90.0	90.0	90.0
	4'-0"	90.0	90.0	90.0	90.0
11'-6"	4'-6"	90.0	90.0	90.0	90.0
	5'-0"	90.0	90.0	90.0	90.0
	5'-6"	90.0	90.0	87.5	90.0
	6'-0"	90.0	90.0	80.2	90.0
	3'-6"	90.0	90.0	90.0	90.0
	4'-0"	90.0	90.0	90.0	90.0
12'-0"	4'-6"	90.0	90.0	90.0	90.0
	5'-0"	90.0	90.0	90.0	90.0
	5'-6"	90.0	90.0	83.8	90.0
	6'-0"	90.0	90.0	76.8	90.0
	3'-6"	90.0	90.0	90.0	90.0
	4'-0"	90.0	90.0	90.0	90.0
12'-6"	4'-6"	90.0	90.0	90.0	90.0
	5'-0"	90.0	90.0	88.5	90.0
	5'-6"	90.0	90.0	80.5	90.0
	6'-0"	90.0	90.0	73.8	87.7

FLORIDA BUILDING CODE (High & Non High Velocity Hurricane Zone)

HR-251 CAPTURED CURTAIN WALL SYSTEM
LARGE & SMALL MISSILE IMPACT INSULATED GLASS

M.P DRAWN BY

04/15/2021 DATE

21-058 DRAWING No

SHEET 12 OF 36

Oldcastle BuildingEnvelope™
803 Airport Rd - Terrell, TX 75160
www.OldcastleBE.com - Phone 800-869-4567

REV. No	DESCRIPTION	DATE	REV. No	DESCRIPTION	DATE
1	OLD 18-032	04/15/21	3		
2			4		

©2021 TILTECO, INC

TILTECO INC.
TILLIT TESTING & ENGINEERING COMPANY
6355 N.W. 36th. St., Ste. 305, VIRGINIA GARDENS, FLORIDA 33166
Phone : (305)871-1530 , Fax : (305)871-1531
e-mail: tilteco@aol.com
CA-0006719
WALTER A. TILLIT Jr., P.E.
FLORIDA Lic. # 44167

WALTER A. TILLIT JR. LICENSE No. 44167 STATE OF FLORIDA PROFESSIONAL ENGINEER

P.E. SEAL/SIGNATURE/DATE

MAXIMUM A.S.D. DESIGN PRESSURE RATING FOR TWIN SPAN MULLION HEAD ANCHOR CONNECTIONS

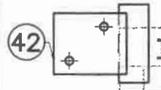

TWIN SPAN MULLION : HEAD CONNECTION *

W/ (1) 6"x 3 1/2" x 4 1/4" LONG ANCHOR #42

TYPE 1 **		MAXIMUM A.S.D. DESIGN PRESSURE RATING (psf)			
MAXIMUM MULLION SPAN	EFFECTIVE SPACING	POURED CONCRETE (Min. f'c = 3ksi) SUBSTRATE			1/4" Min. THK ASTM A-36 STEEL SUBSTRATE
		FASTENERS TYPES			FASTENERS
"L" (ft-in)	"b" (ft-in)	A	B	C	D
8 '-5"	3 '-6"	66.3	69.2	58.9	90.0
	4 '-0"	58.0	60.5	51.5	90.0
	4 '-6"	51.6	53.8	45.8	90.0
	5 '-0"	46.4	48.4	41.2	90.0
	5 '-6"	42.2	44.0	37.5	90.0
8 '-6"	3 '-6"	65.6	68.5	58.3	90.0
	4 '-0"	57.4	59.9	51.0	90.0
	4 '-6"	51.1	53.3	45.4	90.0
	5 '-0"	46.0	48.0	40.8	90.0
	5 '-6"	41.8	43.6	37.1	90.0
9 '-0"	3 '-6"	62.0	64.7	55.1	90.0
	4 '-0"	54.3	56.6	48.2	90.0
	4 '-6"	48.2	50.3	42.8	90.0
	5 '-0"	43.4	45.3	38.6	90.0
	5 '-6"	39.5	41.2	35.1	90.0
9 '-6"	3 '-6"	58.7	61.3	52.2	90.0
	4 '-0"	51.4	53.6	45.7	90.0
	4 '-6"	45.7	47.7	40.6	90.0
	5 '-0"	41.1	42.9	36.5	90.0
	5 '-6"	37.4	39.0	33.2	90.0
10 '-0"	3 '-6"	55.8	58.2	49.6	90.0
	4 '-0"	48.8	50.9	43.4	90.0
	4 '-6"	43.4	45.3	38.6	90.0
	5 '-0"	39.1	40.8	34.7	90.0
	5 '-6"	35.5	37.1	31.6	90.0
10 '-6"	3 '-6"	53.1	55.5	47.2	90.0
	4 '-0"	46.5	48.5	41.3	90.0
	4 '-6"	41.3	43.1	36.7	90.0
	5 '-0"	37.2	38.8	33.1	90.0
	5 '-6"	33.8	35.3	30.0	90.0
11 '-0"	3 '-6"	50.7	52.9	45.1	90.0
	4 '-0"	44.4	46.3	39.4	90.0
	4 '-6"	39.5	41.2	35.1	90.0
	5 '-0"	35.5	37.1	31.6	90.0
	5 '-6"	32.3	33.7	28.7	90.0
11 '-6"	3 '-6"	48.5	50.6	43.1	90.0
	4 '-0"	42.5	44.3	37.7	90.0
	4 '-6"	37.7	39.4	33.5	90.0
	5 '-0"	34.0	35.4	30.2	90.0
	5 '-6"	30.9	32.2	27.4	90.0
12 '-0"	3 '-6"	46.5	48.5	41.3	90.0
	4 '-0"	40.7	42.5	36.2	90.0
	4 '-6"	36.2	37.7	32.1	90.0
	5 '-0"	32.6	34.0	28.9	90.0
	5 '-6"	29.6	30.9	26.3	87.7
12 '-6"	3 '-6"	44.6	46.6	39.7	90.0
	4 '-0"	39.1	40.8	34.7	90.0
	4 '-6"	34.7	36.2	30.9	90.0
	5 '-0"	31.2	32.6	27.8	90.0
	5 '-6"	28.4	29.6	25.2	84.2

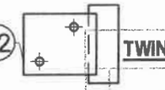

TWIN SPAN MULLION : HEAD CONNECTION *

W/ (1) 6"x 3 1/2" x 4 1/4" LONG ANCHOR #42

TYPE 2 **		MAXIMUM A.S.D. DESIGN PRESSURE RATING (psf)			
MAXIMUM MULLION SPAN	EFFECTIVE SPACING	POURED CONCRETE (Min. f'c = 3ksi) SUBSTRATE			1/4" Min. THK ASTM A-36 STEEL SUBSTRATE
		FASTENERS TYPES			FASTENERS
"L" (ft-in)	"b" (ft-in)	A	B	C	D
8 '-5"	3 '-6"	59.2	61.8	52.6	90.0
	4 '-0"	51.8	54.0	46.0	90.0
	4 '-6"	46.0	48.0	40.9	90.0
	5 '-0"	41.4	43.2	36.8	90.0
	5 '-6"	37.7	39.3	33.5	90.0
8 '-6"	3 '-6"	58.6	61.2	52.1	90.0
	4 '-0"	51.3	53.5	45.6	90.0
	4 '-6"	45.6	47.6	40.5	90.0
	5 '-0"	41.0	42.8	36.5	90.0
	5 '-6"	37.3	38.9	33.1	90.0
9 '-0"	3 '-6"	55.4	57.8	49.2	90.0
	4 '-0"	48.4	50.5	43.0	90.0
	4 '-6"	43.1	44.9	38.3	90.0
	5 '-0"	38.8	40.4	34.4	90.0
	5 '-6"	35.2	36.8	31.3	90.0
9 '-6"	3 '-6"	52.4	54.7	46.6	90.0
	4 '-0"	45.9	47.9	40.8	90.0
	4 '-6"	40.8	42.6	36.2	90.0
	5 '-0"	36.7	38.3	32.6	90.0
	5 '-6"	33.4	34.8	29.7	90.0
10 '-0"	3 '-6"	49.8	52.0	44.3	90.0
	4 '-0"	43.6	45.5	38.7	90.0
	4 '-6"	38.8	40.4	34.4	90.0
	5 '-0"	34.9	36.4	31.0	90.0
	5 '-6"	31.7	33.1	28.2	90.0
10 '-6"	3 '-6"	47.4	49.5	42.2	90.0
	4 '-0"	41.5	43.3	36.9	90.0
	4 '-6"	36.9	38.5	32.8	90.0
	5 '-0"	33.2	34.7	29.5	90.0
	5 '-6"	30.2	31.5	26.8	89.5
11 '-0"	3 '-6"	45.3	47.3	40.2	90.0
	4 '-0"	39.6	41.4	35.2	90.0
	4 '-6"	35.2	36.8	31.3	90.0
	5 '-0"	31.7	33.1	28.2	90.0
	5 '-6"	28.8	30.1	25.6	85.4
11 '-6"	3 '-6"	43.3	45.2	38.5	90.0
	4 '-0"	37.9	39.6	33.7	90.0
	4 '-6"	33.7	35.2	29.9	90.0
	5 '-0"	30.3	31.6	26.9	89.9
	5 '-6"	27.6	28.8	24.5	81.7
12 '-0"	3 '-6"	41.5	43.3	36.9	90.0
	4 '-0"	36.3	37.9	32.3	90.0
	4 '-6"	32.3	33.7	28.7	90.0
	5 '-0"	29.1	30.3	25.8	86.1
	5 '-6"	26.4	27.6	23.5	78.3
12 '-6"	3 '-6"	39.9	41.6	35.4	90.0
	4 '-0"	34.9	36.4	31.0	90.0
	4 '-6"	31.0	32.3	27.5	90.0
	5 '-0"	27.9	29.1	24.8	82.7
	5 '-6"	25.4	26.5	22.5	75.2

TWIN SPAN MULLION: TOP CONNECTION

W/ (2) 6"x 3 1/2" x 4 1/4" LONG ANCHORS #42 & 42A

TYPES 1 & 2 **		MAXIMUM A.S.D. DESIGN PRESSURE RATING (psf)			
MAXIMUM MULLION SPAN	EFFECTIVE SPACING	POURED CONCRETE (Min. f'c = 3ksi) SUBSTRATE			1/4" Min. THK ASTM A-36 STEEL SUBSTRATE
		FASTENERS TYPES			FASTENERS
"L" (ft-in)	"b" (ft-in)	A	B	C	D
8 '-5"	3 '-6"	90.0	90.0	90.0	90.0
	4 '-0"	90.0	90.0	90.0	90.0
	4 '-6"	90.0	90.0	90.0	90.0
	5 '-0"	90.0	90.0	90.0	90.0
	5 '-6"	90.0	90.0	90.0	90.0
8 '-6"	3 '-6"	90.0	90.0	90.0	90.0
	4 '-0"	90.0	90.0	90.0	90.0
	4 '-6"	90.0	90.0	90.0	90.0
	5 '-0"	90.0	90.0	90.0	90.0
	5 '-6"	90.0	90.0	90.0	90.0
9 '-0"	3 '-6"	90.0	90.0	90.0	90.0
	4 '-0"	90.0	90.0	90.0	90.0
	4 '-6"	90.0	90.0	90.0	90.0
	5 '-0"	90.0	90.0	90.0	90.0
	5 '-6"	90.0	90.0	90.0	90.0
9 '-6"	3 '-6"	90.0	90.0	90.0	90.0
	4 '-0"	90.0	90.0	90.0	90.0
	4 '-6"	90.0	90.0	90.0	90.0
	5 '-0"	90.0	90.0	90.0	90.0
	5 '-6"	90.0	90.0	90.0	90.0
10 '-0"	3 '-6"	90.0	90.0	90.0	90.0
	4 '-0"	90.0	90.0	90.0	90.0
	4 '-6"	90.0	90.0	90.0	90.0
	5 '-0"	90.0	90.0	90.0	90.0
	5 '-6"	90.0	90.0	90.0	90.0
10 '-6"	3 '-6"	90.0	90.0	90.0	90.0
	4 '-0"	90.0	90.0	90.0	90.0
	4 '-6"	90.0	90.0	90.0	90.0
	5 '-0"	90.0	90.0	90.0	90.0
	5 '-6"	90.0	90.0	90.0	90.0
11 '-0"	3 '-6"	90.0	90.0	90.0	90.0
	4 '-0"	90.0	90.0	90.0	90.0
	4 '-6"	90.0	90.0	90.0	90.0
	5 '-0"	90.0	90.0	90.0	90.0
	5 '-6"	90.0	90.0	90.0	90.0
11 '-6"	3 '-6"	90.0	90.0	90.0	90.0
	4 '-0"	90.0	90.0	90.0	90.0
	4 '-6"	90.0	90.0	90.0	90.0
	5 '-0"	90.0	90.0	90.0	90.0
	5 '-6"	90.0	90.0	90.0	90.0
12 '-0"	3 '-6"	90.0	90.0	90.0	90.0
	4 '-0"	90.0	90.0	90.0	90.0
	4 '-6"	90.0	90.0	90.0	90.0
	5 '-0"	90.0	90.0	90.0	90.0
	5 '-6"	90.0	90.0	90.0	90.0
12 '-6"	3 '-6"	90.0	90.0	90.0	90.0
	4 '-0"	90.0	90.0	90.0	90.0
	4 '-6"	90.0	90.0	90.0	90.0
	5 '-0"	90.0	90.0	90.0	90.0
	5 '-6"	90.0	90.0	90.0	90.0

*SEE CONNECTION DETAILS ON SHEETS 26 & 27 FOR FASTENERS QUANTITY & LOCATIONS AT MULLION. ₮

**

TYPE 1 CONNECTION:

CORRESPONDS TO CONTINUOUS TWIN SPAN MULLION INSTALLATIONS.

TYPE 2 CONNECTION:

CORRESPONDS TO SPLICED TWIN SPAN MULLION INSTALLATIONS.

B FASTENERS TYPES REQUIREMENTS

A - 1/2"Ø HILTI KWIK BOLT TZ ANCHOR W/ 3 1/4" Min. EMBEDMENT INTO 8" Min. THICK POURED CONCRETE (Min. f'c = 3 ksi) BEYOND ANY FINISH MATERIAL, W/ 6" MIN. EDGE DISTANCE.

B - 1/2"Ø HILTI KWIK BOLT TZ ANCHOR W/ 3 1/4" Min. EMBEDMENT INTO 6" Min. THICK POURED CONCRETE (Min. f'c = 3 ksi) BEYOND ANY FINISH MATERIAL, W/ 7 1/2" MIN. EDGE DISTANCE.

C - 1/2"Ø HILTI HUS-H SCREW ANCHOR W/ 3" Min. EMBEDMENT INTO 4" Min. THICK POURED CONCRETE (Min. f'c = 3 ksi) BEYOND ANY FINISH MATERIAL, W/ 3 3/4" MIN. EDGE DISTANCE.

D - 1/2"Ø-13 TYPE "F" GRADE 5 BOLT TO 1/4" MIN. THK. ASTM A-36 STEEL W/ 1" MIN. EDGE DISTANCE OR 1/2"Ø -13 SAE GALVANIZED STEEL GRADE 5 HHB THRU BOLT W/ NUT & LOCK WASHER TO 1/4" MIN. THK. ASTM A-36 STEEL W/ 1" MIN. EDGE DISTANCE.

₮ MAX. PRESSURE RATING FOR JAMB CONNECTION @ HEAD W/ ANCHOR 42 IS ± 100 psf FOR SINGLE SPAN CURTAIN WALL AND ±90 psf FOR TWIN SPAN CURTAIN WALL (FOR LARGE MISSILE) & 90.0 psf (FOR SMALL MISSILE), VALID FOR ALL EFFECTIVE WIDTHS. SEE CONNECTION DETAILS ON SHEET 28 FOR FASTENERS QUANTITY AND LOCATION AT JAMB.

FLORIDA BUILDING CODE (High & Non High Velocity Hurricane Zone)

HR-251 CAPTURED CURTAIN WALL SYSTEM
LARGE & SMALL MISSILE IMPACT INSULATED GLASS

M.P
DRAWN BY

04/15/2021
DATE

21-058
DRAWING No

SHEET 13 OF 36

Oldcastle BuildingEnvelope™
803 Airport Rd - Terrell, TX 75160
www.OldcastleBE.com - Phone 800-869-4567

REV. No	DESCRIPTION	DATE	REV. No	DESCRIPTION	DATE
1	OLD 18-032	04/18/21	3		
2			4		

©2021 TILTECO, INC

TILTECO INC.
TILLIT TESTING & ENGINEERING COMPANY
6355 N.W. 36th. St., Ste. 305, VIRGINIA GARDENS, FLORIDA 33166
Phone : (305)871-1530 . Fax : (305)871-1531
e-mail: tilteco@aol.com
CA-0006719
WALTER A. TILLIT Jr., P.E.
FLORIDA Lic. # 44167

WALTER A. TILLIT JR. LICENSE No. 44167 STATE OF FLORIDA PROFESSIONAL ENGINEER

P.E. SEAL/SIGNATURE/DATE

MAXIMUM A.S.D. DESIGN PRESSURE RATING FOR JAMBS AT SINGLE SPAN CURTAIN WALL FASTENED TO EXISTING STRUCTURE W/ 3/8"Ø FASTENERS

(SEE ALSO SHEETS 15, 16 & 17) VALID ONLY FOR LARGE MISSILE INSTALLATION

OPTION #1 : 2 FASTENERS CONNECTION

MAXIMUM MULLION SPAN	EFFECTIVE SPACING b = S_5 /2 *	MAXIMUM A.S.D. DESIGN PRESSURE RATING (psf)					
		POURED CONCRETE (Min. f'c = 3ksi) SUBSTRATE			GROUT FILLED CONCRETE BLOCK SUBSTRATE		1/4" Min. THK ASTM A-36 STEEL SUBSTRATE
		FASTENER TYPES			FASTENER TYPES		FASTENER
"L" (Ft-in)	"b" (Ft-in)	E	F	G	H	I	J
8'-5"	1'-9"	100.0	100.0	100.0	100.0	100.0	100.0
	2'-0"	100.0	100.0	93.3	100.0	93.3	100.0
	2'-3"	100.0	100.0	82.9	100.0	82.9	100.0
	2'-6"	91.5	91.5	74.6	91.5	74.6	100.0
	2'-9"	83.2	83.2	67.8	83.2	67.8	94.1
	3'-3"	70.4	70.4	57.4	70.4	57.4	79.7
8'-6"	1'-9"	100.0	100.0	100.0	100.0	100.0	100.0
	2'-0"	100.0	100.0	92.4	100.0	92.4	100.0
	2'-3"	100.0	100.0	82.1	100.0	82.1	100.0
	2'-6"	90.6	90.6	73.9	90.6	73.9	100.0
	2'-9"	82.3	82.3	67.2	82.3	67.2	93.2
	3'-3"	69.7	69.7	56.8	69.7	56.8	78.9
9'-0"	1'-9"	100.0	100.0	99.7	100.0	99.7	100.0
	2'-0"	100.0	100.0	87.2	100.0	87.2	100.0
	2'-3"	95.0	95.0	77.5	95.0	77.5	100.0
	2'-6"	85.5	85.5	69.8	85.5	69.8	96.8
	2'-9"	77.8	77.8	63.4	77.8	63.4	88.0
	3'-3"	65.8	65.8	53.7	65.8	53.7	74.5
9'-6"	1'-9"	100.0	100.0	94.5	100.0	94.5	100.0
	2'-0"	100.0	100.0	82.6	100.0	82.6	100.0
	2'-3"	90.0	90.0	73.5	90.0	73.5	100.0
	2'-6"	81.0	81.0	66.1	81.0	66.1	91.7
	2'-9"	73.7	73.7	60.1	73.7	60.1	83.4
	3'-3"	62.3	62.3	50.9	62.3	50.9	70.6
10'-0"	1'-9"	100.0	100.0	89.7	100.0	89.7	100.0
	2'-0"	96.2	96.2	78.5	96.2	78.5	100.0
	2'-3"	85.5	85.5	69.8	85.5	69.8	96.8
	2'-6"	77.0	77.0	62.8	77.0	62.8	87.2
	2'-9"	70.0	70.0	57.1	70.0	57.1	79.2
	3'-3"	59.2	59.2	48.3	59.2	48.3	67.0
10'-6"	1'-9"	100.0	100.0	85.5	100.0	85.5	100.0
	2'-0"	91.7	91.7	74.8	91.7	74.8	100.0
	2'-3"	81.5	81.5	66.5	81.5	66.5	92.2
	2'-6"	73.3	73.3	59.8	73.3	59.8	83.0
	2'-9"	66.7	66.7	54.4	66.7	54.4	75.5
	3'-3"	56.4	56.4	46.0	56.4	46.0	63.9
11'-0"	1'-9"	100.0	100.0	81.6	100.0	81.6	100.0
	2'-0"	87.5	87.5	71.4	87.5	71.4	99.0
	2'-3"	77.8	77.8	63.4	77.8	63.4	88.0
	2'-6"	70.0	70.0	57.1	70.0	57.1	79.2
	2'-9"	63.6	63.6	51.9	63.6	51.9	72.0
	3'-3"	53.8	53.8	43.9	53.8	43.9	60.9
11'-6"	1'-9"	95.6	95.6	78.0	95.6	78.0	100.0
	2'-0"	83.7	83.7	68.3	83.7	68.3	94.7
	2'-3"	74.4	74.4	60.7	74.4	60.7	84.2
	2'-6"	66.9	66.9	54.6	66.9	54.6	75.8
	2'-9"	60.9	60.9	49.7	60.9	49.7	68.9
	3'-3"	51.5	51.5	42.0	51.5	42.0	58.3
12'-0"	1'-9"	91.7	91.7	74.8	91.7	74.8	100.0
	2'-0"	80.2	80.2	65.4	80.2	65.4	90.8
	2'-3"	71.3	71.3	58.2	71.3	58.2	80.7
	2'-6"	64.2	64.2	52.3	64.2	52.3	72.6
	2'-9"	58.3	58.3	47.6	58.3	47.6	66.0
	3'-3"	49.4	49.4	40.3	49.4	40.3	55.9
12'-6"	1'-9"	88.0	88.0	71.8	88.0	71.8	99.6
	2'-0"	77.0	77.0	62.8	77.0	62.8	87.2
	2'-3"	68.4	68.4	55.8	68.4	55.8	77.5
	2'-6"	61.6	61.6	50.2	61.6	50.2	69.7
	2'-9"	56.0	56.0	45.7	56.0	45.7	63.4
	3'-3"	47.4	47.4	38.7	47.4	38.7	53.6

OPTION #2 : 3 FASTENERS CONNECTION

MAXIMUM MULLION SPAN	EFFECTIVE SPACING b = S_5 /2 *	MAXIMUM A.S.D. DESIGN PRESSURE RATING (psf)					
		POURED CONCRETE (Min. f'c = 3ksi) SUBSTRATE			GROUT FILLED CONCRETE BLOCK SUBSTRATE		1/4" Min. THK ASTM A-36 STEEL SUBSTRATE
		FASTENER TYPES			FASTENER TYPES		FASTENER
"L" (Ft-in)	"b" (Ft-in)	E	F	G	H	I	J
8'-5"	1'-9"	100.0	100.0	100.0	100.0	100.0	100.0
	2'-0"	100.0	100.0	100.0	100.0	100.0	100.0
	2'-3"	100.0	100.0	100.0	100.0	100.0	100.0
	2'-6"	100.0	100.0	100.0	100.0	100.0	100.0
	2'-9"	100.0	100.0	100.0	100.0	100.0	100.0
	3'-3"	100.0	100.0	86.1	100.0	86.1	100.0
8'-6"	1'-9"	100.0	100.0	100.0	100.0	100.0	100.0
	2'-0"	100.0	100.0	100.0	100.0	100.0	100.0
	2'-3"	100.0	100.0	100.0	100.0	100.0	100.0
	2'-6"	100.0	100.0	100.0	100.0	100.0	100.0
	2'-9"	100.0	100.0	100.0	100.0	100.0	100.0
	3'-3"	100.0	100.0	85.3	100.0	85.3	100.0
9'-0"	1'-9"	100.0	100.0	100.0	100.0	100.0	100.0
	2'-0"	100.0	100.0	100.0	100.0	100.0	100.0
	2'-3"	100.0	100.0	100.0	100.0	100.0	100.0
	2'-6"	100.0	100.0	100.0	100.0	100.0	100.0
	2'-9"	100.0	100.0	95.2	100.0	95.2	100.0
	3'-3"	98.7	98.7	80.5	98.7	80.5	100.0
9'-6"	1'-9"	100.0	100.0	100.0	100.0	100.0	100.0
	2'-0"	100.0	100.0	100.0	100.0	100.0	100.0
	2'-3"	100.0	100.0	100.0	100.0	100.0	100.0
	2'-6"	100.0	100.0	99.2	100.0	99.2	100.0
	2'-9"	100.0	100.0	90.2	100.0	90.2	100.0
	3'-3"	93.5	93.5	76.3	93.5	76.3	100.0
10'-0"	1'-9"	100.0	100.0	100.0	100.0	100.0	100.0
	2'-0"	100.0	100.0	100.0	100.0	100.0	100.0
	2'-3"	100.0	100.0	100.0	100.0	100.0	100.0
	2'-6"	100.0	100.0	94.2	100.0	94.2	100.0
	2'-9"	100.0	100.0	85.7	100.0	85.7	100.0
	3'-3"	88.8	88.8	72.5	88.8	72.5	100.0
10'-6"	1'-9"	100.0	100.0	100.0	100.0	100.0	100.0
	2'-0"	100.0	100.0	100.0	100.0	100.0	100.0
	2'-3"	100.0	100.0	99.7	100.0	99.7	100.0
	2'-6"	100.0	100.0	89.7	100.0	89.7	100.0
	2'-9"	100.0	100.0	81.6	100.0	81.6	100.0
	3'-3"	84.6	84.6	69.0	84.6	69.0	95.8
11'-0"	1'-9"	100.0	100.0	100.0	100.0	100.0	100.0
	2'-0"	100.0	100.0	100.0	100.0	100.0	100.0
	2'-3"	100.0	100.0	95.2	100.0	95.2	100.0
	2'-6"	100.0	100.0	85.7	100.0	85.7	100.0
	2'-9"	95.4	95.4	77.9	95.4	77.9	100.0
	3'-3"	80.8	80.8	65.9	80.8	65.9	91.4
11'-6"	1'-9"	100.0	100.0	100.0	100.0	100.0	100.0
	2'-0"	100.0	100.0	100.0	100.0	100.0	100.0
	2'-3"	100.0	100.0	91.0	100.0	91.0	100.0
	2'-6"	100.0	100.0	81.9	100.0	81.9	100.0
	2'-9"	91.3	91.3	74.5	91.3	74.5	100.0
	3'-3"	77.2	77.2	63.0	77.2	63.0	87.4
12'-0"	1'-9"	100.0	100.0	100.0	100.0	100.0	100.0
	2'-0"	100.0	100.0	98.1	100.0	98.1	100.0
	2'-3"	100.0	100.0	87.2	100.0	87.2	100.0
	2'-6"	96.2	96.2	78.5	96.2	78.5	100.0
	2'-9"	87.5	87.5	71.4	87.5	71.4	99.0
	3'-3"	74.0	74.0	60.4	74.0	60.4	83.8
12'-6"	1'-9"	100.0	100.0	100.0	100.0	100.0	100.0
	2'-0"	100.0	100.0	94.2	100.0	94.2	100.0
	2'-3"	100.0	100.0	83.7	100.0	83.7	100.0
	2'-6"	92.4	92.4	75.4	92.4	75.4	100.0
	2'-9"	84.0	84.0	68.5	84.0	68.5	95.1
	3'-3"	71.1	71.1	58.0	71.1	58.0	80.5

OPTION #3 : 4 FASTENERS CONNECTION

MAXIMUM MULLION SPAN	EFFECTIVE SPACING b = S_5 /2 *	MAXIMUM A.S.D. DESIGN PRESSURE RATING (psf)					
		POURED CONCRETE (Min. f'c = 3ksi) SUBSTRATE			GROUT FILLED CONCRETE BLOCK SUBSTRATE		1/4" Min. THK ASTM A-36 STEEL SUBSTRATE
		FASTENER TYPES			FASTENER TYPES		FASTENER
"L" (Ft-in)	"b" (Ft-in)	E	F	G	H	I	J
8'-5"	1'-9"	100.0	100.0	100.0	100.0	100.0	100.0
	2'-0"	100.0	100.0	100.0	100.0	100.0	100.0
	2'-3"	100.0	100.0	100.0	100.0	100.0	100.0
	2'-6"	100.0	100.0	100.0	100.0	100.0	100.0
	2'-9"	100.0	100.0	100.0	100.0	100.0	100.0
	3'-3"	100.0	100.0	100.0	100.0	100.0	100.0
8'-6"	1'-9"	100.0	100.0	100.0	100.0	100.0	100.0
	2'-0"	100.0	100.0	100.0	100.0	100.0	100.0
	2'-3"	100.0	100.0	100.0	100.0	100.0	100.0
	2'-6"	100.0	100.0	100.0	100.0	100.0	100.0
	2'-9"	100.0	100.0	100.0	100.0	100.0	100.0
	3'-3"	100.0	100.0	100.0	100.0	100.0	100.0
9'-0"	1'-9"	100.0	100.0	100.0	100.0	100.0	100.0
	2'-0"	100.0	100.0	100.0	100.0	100.0	100.0
	2'-3"	100.0	100.0	100.0	100.0	100.0	100.0
	2'-6"	100.0	100.0	100.0	100.0	100.0	100.0
	2'-9"	100.0	100.0	100.0	100.0	100.0	100.0
	3'-3"	100.0	100.0	100.0	100.0	100.0	100.0
9'-6"	1'-9"	100.0	100.0	100.0	100.0	100.0	100.0
	2'-0"	100.0	100.0	100.0	100.0	100.0	100.0
	2'-3"	100.0	100.0	100.0	100.0	100.0	100.0
	2'-6"	100.0	100.0	100.0	100.0	100.0	100.0
	2'-9"	100.0	100.0	100.0	100.0	100.0	100.0
	3'-3"	100.0	100.0	100.0	100.0	100.0	100.0
10'-0"	1'-9"	100.0	100.0	100.0	100.0	100.0	100.0
	2'-0"	100.0	100.0	100.0	100.0	100.0	100.0
	2'-3"	100.0	100.0	100.0	100.0	100.0	100.0
	2'-6"	100.0	100.0	100.0	100.0	100.0	100.0
	2'-9"	100.0	100.0	100.0	100.0	100.0	100.0
	3'-3"	100.0	100.0	96.6	100.0	96.6	100.0
10'-6"	1'-9"	100.0	100.0	100.0	100.0	100.0	100.0
	2'-0"	100.0	100.0	100.0	100.0	100.0	100.0
	2'-3"	100.0	100.0	100.0	100.0	100.0	100.0
	2'-6"	100.0	100.0	100.0	100.0	100.0	100.0
	2'-9"	100.0	100.0	100.0	100.0	100.0	100.0
	3'-3"	100.0	100.0	92.0	100.0	92.0	100.0
11'-0"	1'-9"	100.0	100.0	100.0	100.0	100.0	100.0
	2'-0"	100.0	100.0	100.0	100.0	100.0	100.0
	2'-3"	100.0	100.0	100.0	100.0	100.0	100.0
	2'-6"	100.0	100.0	100.0	100.0	100.0	100.0
	2'-9"	100.0	100.0	100.0	100.0	100.0	100.0
	3'-3"	100.0	100.0	87.8	100.0	87.8	100.0
11'-6"	1'-9"	100.0	100.0	100.0	100.0	100.0	100.0
	2'-0"	100.0	100.0	100.0	100.0	100.0	100.0
	2'-3"	100.0	100.0	100.0	100.0	100.0	100.0
	2'-6"	100.0	100.0	100.0	100.0	100.0	100.0
	2'-9"	100.0	100.0	100.0	100.0	100.0	100.0
	3'-3"	100.0	100.0	84.0	100.0	84.0	100.0
12'-0"	1'-9"	100.0	100.0	100.0	100.0	100.0	100.0
	2'-0"	100.0	100.0	100.0	100.0	100.0	100.0
	2'-3"	100.0	100.0	100.0	100.0	100.0	100.0
	2'-6"	100.0	100.0	100.0	100.0	100.0	100.0
	2'-9"	100.0	100.0	95.2	100.0	95.2	100.0
	3'-3"	98.7	98.7	80.5	98.7	80.5	100.0
12'-6"	1'-9"	100.0	100.0	100.0	100.0	100.0	100.0
	2'-0"	100.0	100.0	100.0	100.0	100.0	100.0
	2'-3"	100.0	100.0	100.0	100.0	100.0	100.0
	2'-6"	100.0	100.0	100.0	100.0	100.0	100.0
	2'-9"	100.0	100.0	91.4	100.0	91.4	100.0
	3'-3"	94.8	94.8	77.3	94.8	77.3	100.0

* SEE SHEET 9 FOR EFFECTIVE SPACING DEFINITION AT ISOMETRIC.

OPTION # 1 (ELEVATION)
(2) FASTENERS CONNECTION

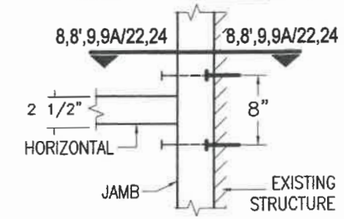

OPTION # 2 (ELEVATION)
(3) FASTENERS CONNECTION

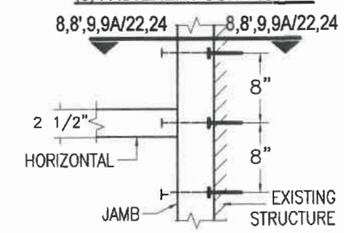

OPTION # 3 (ELEVATION)
(4) FASTENERS CONNECTION

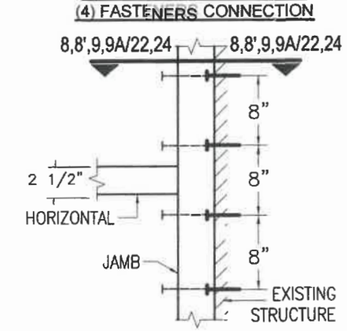

B FASTENER TYPES REQUIREMENTS:

E - 3/8"Ø HILTI KWIK BOLT TZ ANCHOR W/ 2" Min. EMBEDMENT INTO POURED CONCRETE (Min. f'c = 3 ksi) BEYOND ANY FINISH MATERIAL, W/ 4" MIN. EDGE DISTANCE.

F - 3/8"Ø HILTI KWIK BOLT 3 ANCHOR W/ 2 1/2" Min. EMBEDMENT INTO POURED CONCRETE (Min. f'c = 3 ksi) BEYOND ANY FINISH MATERIAL, W/ 4" MIN. EDGE DISTANCE.

G - 3/8"Ø HILTI HUS-H SCREW ANCHOR W/ 2 3/4" Min. EMBEDMENT INTO POURED CONCRETE (Min. f'c = 3 ksi) BEYOND ANY FINISH MATERIAL, W/ 3 3/4" MIN. EDGE DISTANCE.

H - 3/8"Ø HILTI KWIK BOLT 3 ANCHOR W/ 2 1/2" Min. EMBEDMENT INTO GROUT FILLED CONCRETE BLOCK BEYOND ANY FINISH MATERIAL, W/ 4" MIN. EDGE DISTANCE.

I - 3/8"Ø HILTI HUS-H SCREW ANCHOR W/ 3 1/4" Min. EMBEDMENT INTO GROUT FILLED CONCRETE BLOCK BEYOND ANY FINISH MATERIAL, W/ 4" MIN. EDGE DISTANCE.

J - 3/8"Ø-13 TYPE "F" GRADE 5 BOLT TO 1/4" MIN. THK. ASTM A-36 STEEL W/ 1" MIN. EDGE DISTANCE OR 3/8"Ø-13 SAE GRADE 5, GALVANIZED STEEL BOLT W/ LOCK WASHER & NUT TO 1/4" Min. THK. ASTM A-36 STEEL & MIN. E.D. = 3/4".

FLORIDA BUILDING CODE (High & Non High Velocity Hurricane Zone)

HR-251 CAPTURED CURTAIN WALL SYSTEM
LARGE & SMALL MISSILE IMPACT INSULATED GLASS

M.P
DRAWN BY

04/15/2021
DATE

21-058
DRAWING No

SHEET 14 OF 36

Oldcastle BuildingEnvelope™
803 Airport Rd - Terrell, TX 75160
www.OldcastleBE.com - Phone 800-869-4567

REV. No	DESCRIPTION	DATE	REV. No	DESCRIPTION	DATE
1	OLD 18-032	04/19/21	3		
2			4		

©2021 TILTECO, INC

TILTECO INC.
TILLIT TESTING & ENGINEERING COMPANY
6355 N.W. 36th. St., Ste. 305, VIRGINIA GARDENS, FLORIDA 33166
Phone : (305)871-1530 , Fax : (305)871-1531
e-mail: tilteco@aol.com
CA-0006719
WALTER A. TILLIT Jr., P.E.
FLORIDA Lic. # 44167

SEAL/SIGNATURE/DATE

WALTER A. TILLIT JR. LICENSE No. 44167 STATE OF FLORIDA PROFESSIONAL ENGINEER

MAXIMUM A.S.D. DESIGN PRESSURE RATING FOR JAMBS AT SINGLE SPAN CURTAIN WALL FASTENED TO EXISTING STRUCTURE W/ 3/8"Ø FASTENERS

(SEE ALSO SHEETS 15, 16 & 17) VALID ONLY FOR SMALL MISSILE INSTALLATION

OPTION #1 : 2 FASTENERS CONNECTION

MAXIMUM MULLION SPAN	EFFECTIVE SPACING b = S_5 /2 *	MAXIMUM A.S.D. DESIGN PRESSURE RATING (psf)					
		POURED CONCRETE (Min. f'c = 3ksi) SUBSTRATE			GROUT FILLED CONCRETE BLOCK SUBSTRATE		1/4" Min. THK ASTM A-36 STEEL SUBSTRATE
		FASTENER TYPES			FASTENER TYPES		FASTENER
"L" (Ft-in)	"b" (Ft-in)	E	F	G	H	I	J
8'-5"	1'-9"	100.0	100.0	100.0	100.0	100.0	100.0
	2'-0"	100.0	100.0	93.3	100.0	93.3	100.0
	2'-3"	100.0	100.0	82.9	100.0	82.9	100.0
	2'-6"	91.5	91.5	74.6	91.5	74.6	100.0
	2'-9"	83.2	83.2	67.8	83.2	67.8	94.1
	3'-3"	70.4	70.4	57.4	70.4	57.4	79.7
8'-6"	1'-9"	100.0	100.0	100.0	100.0	100.0	100.0
	2'-0"	100.0	100.0	92.4	100.0	92.4	100.0
	2'-3"	100.0	100.0	82.1	100.0	82.1	100.0
	2'-6"	90.6	90.6	73.9	90.6	73.9	100.0
	2'-9"	82.3	82.3	67.2	82.3	67.2	93.2
	3'-3"	69.7	69.7	56.8	69.7	56.8	78.9
9'-0"	1'-9"	100.0	100.0	99.7	100.0	99.7	100.0
	2'-0"	100.0	100.0	87.2	100.0	87.2	100.0
	2'-3"	95.0	95.0	77.5	95.0	77.5	100.0
	2'-6"	85.5	85.5	69.8	85.5	69.8	96.8
	2'-9"	77.8	77.8	63.4	77.8	63.4	88.0
	3'-3"	65.8	65.8	53.7	65.8	53.7	74.5
9'-6"	1'-9"	100.0	100.0	94.5	100.0	94.5	100.0
	2'-0"	100.0	100.0	82.6	100.0	82.6	100.0
	2'-3"	90.0	90.0	73.5	90.0	73.5	100.0
	2'-6"	81.0	81.0	66.1	81.0	66.1	91.7
	2'-9"	73.7	73.7	60.1	73.7	60.1	83.4
	3'-3"	62.3	62.3	50.9	62.3	50.9	70.6
10'-0"	1'-9"	100.0	100.0	89.7	100.0	89.7	100.0
	2'-0"	96.2	96.2	78.5	96.2	78.5	100.0
	2'-3"	85.5	85.5	69.8	85.5	69.8	96.8
	2'-6"	77.0	77.0	62.8	77.0	62.8	87.2
	2'-9"	70.0	70.0	57.1	70.0	57.1	79.2
	3'-3"	59.2	59.2	48.3	59.2	48.3	67.0
10'-6"	1'-9"	100.0	100.0	85.5	100.0	85.5	100.0
	2'-0"	91.7	91.7	74.8	91.7	74.8	100.0
	2'-3"	81.5	81.5	66.5	81.5	66.5	92.2
	2'-6"	73.3	73.3	59.8	73.3	59.8	83.0
	2'-9"	66.7	66.7	54.4	66.7	54.4	75.5
	3'-3"	56.4	56.4	46.0	56.4	46.0	63.9
11'-0"	1'-9"	100.0	100.0	81.6	100.0	81.6	100.0
	2'-0"	87.5	87.5	71.4	87.5	71.4	99.0
	2'-3"	77.8	77.8	63.4	77.8	63.4	88.0
	2'-6"	70.0	70.0	57.1	70.0	57.1	79.2
	2'-9"	63.6	63.6	51.9	63.6	51.9	72.0
	3'-3"	53.8	53.8	43.9	53.8	43.9	60.9
11'-6"	1'-9"	95.6	95.6	78.0	95.6	78.0	100.0
	2'-0"	83.7	83.7	68.3	83.7	68.3	94.7
	2'-3"	74.4	74.4	60.7	74.4	60.7	84.2
	2'-6"	66.9	66.9	54.6	66.9	54.6	75.8
	2'-9"	60.9	60.9	49.7	60.9	49.7	68.9
	3'-3"	51.5	51.5	42.0	51.5	42.0	58.3
12'-0"	1'-9"	91.7	91.7	74.8	91.7	74.8	100.0
	2'-0"	80.2	80.2	65.4	80.2	65.4	90.8
	2'-3"	71.3	71.3	58.2	71.3	58.2	80.7
	2'-6"	64.2	64.2	52.3	64.2	52.3	72.6
	2'-9"	58.3	58.3	47.6	58.3	47.6	66.0
	3'-3"	49.4	49.4	40.3	49.4	40.3	55.9
12'-6"	1'-9"	88.0	88.0	71.8	88.0	71.8	99.6
	2'-0"	77.0	77.0	62.8	77.0	62.8	87.2
	2'-3"	68.4	68.4	55.8	68.4	55.8	77.5
	2'-6"	61.6	61.6	50.2	61.6	50.2	69.7
	2'-9"	56.0	56.0	45.7	56.0	45.7	63.4
	3'-3"	47.4	47.4	38.7	47.4	38.7	53.6

OPTION #2 : 3 FASTENERS CONNECTION

MAXIMUM MULLION SPAN	EFFECTIVE SPACING b = S_5 /2 *	MAXIMUM A.S.D. DESIGN PRESSURE RATING (psf)					
		POURED CONCRETE (Min. f'c = 3ksi) SUBSTRATE			GROUT FILLED CONCRETE BLOCK SUBSTRATE		1/4" Min. THK ASTM A-36 STEEL SUBSTRATE
		FASTENER TYPES			FASTENER TYPES		FASTENER
"L" (Ft-in)	"b" (Ft-in)	E	F	G	H	I	J
8'-5"	1'-9"	100.0	100.0	100.0	100.0	100.0	100.0
	2'-0"	100.0	100.0	100.0	100.0	100.0	100.0
	2'-3"	100.0	100.0	100.0	100.0	100.0	100.0
	2'-6"	100.0	100.0	100.0	100.0	100.0	100.0
	2'-9"	100.0	100.0	100.0	100.0	100.0	100.0
	3'-3"	100.0	100.0	86.1	100.0	86.1	100.0
8'-6"	1'-9"	100.0	100.0	100.0	100.0	100.0	100.0
	2'-0"	100.0	100.0	100.0	100.0	100.0	100.0
	2'-3"	100.0	100.0	100.0	100.0	100.0	100.0
	2'-6"	100.0	100.0	100.0	100.0	100.0	100.0
	2'-9"	100.0	100.0	100.0	100.0	100.0	100.0
	3'-3"	100.0	100.0	85.3	100.0	85.3	100.0
9'-0"	1'-9"	100.0	100.0	100.0	100.0	100.0	100.0
	2'-0"	100.0	100.0	100.0	100.0	100.0	100.0
	2'-3"	100.0	100.0	100.0	100.0	100.0	100.0
	2'-6"	100.0	100.0	100.0	100.0	100.0	100.0
	2'-9"	100.0	100.0	95.2	100.0	95.2	100.0
	3'-3"	98.7	98.7	80.5	98.7	80.5	100.0
9'-6"	1'-9"	100.0	100.0	100.0	100.0	100.0	100.0
	2'-0"	100.0	100.0	100.0	100.0	100.0	100.0
	2'-3"	100.0	100.0	100.0	100.0	100.0	100.0
	2'-6"	100.0	100.0	99.2	100.0	99.2	100.0
	2'-9"	100.0	100.0	90.2	100.0	90.2	100.0
	3'-3"	93.5	93.5	76.3	93.5	76.3	100.0
10'-0"	1'-9"	100.0	100.0	100.0	100.0	100.0	100.0
	2'-0"	100.0	100.0	100.0	100.0	100.0	100.0
	2'-3"	100.0	100.0	100.0	100.0	100.0	100.0
	2'-6"	100.0	100.0	94.2	100.0	94.2	100.0
	2'-9"	100.0	100.0	85.7	100.0	85.7	100.0
	3'-3"	88.8	88.8	72.5	88.8	72.5	100.0
10'-6"	1'-9"	100.0	100.0	100.0	100.0	100.0	100.0
	2'-0"	100.0	100.0	100.0	100.0	100.0	100.0
	2'-3"	100.0	100.0	99.7	100.0	99.7	100.0
	2'-6"	100.0	100.0	89.7	100.0	89.7	100.0
	2'-9"	100.0	100.0	81.6	100.0	81.6	100.0
	3'-3"	84.6	84.6	69.0	84.6	69.0	95.8
11'-0"	1'-9"	100.0	100.0	100.0	100.0	100.0	100.0
	2'-0"	100.0	100.0	100.0	100.0	100.0	100.0
	2'-3"	100.0	100.0	95.2	100.0	95.2	100.0
	2'-6"	100.0	100.0	85.7	100.0	85.7	100.0
	2'-9"	95.4	95.4	77.9	95.4	77.9	100.0
	3'-3"	80.8	80.8	65.9	80.8	65.9	91.4
11'-6"	1'-9"	100.0	100.0	100.0	100.0	100.0	100.0
	2'-0"	100.0	100.0	100.0	100.0	100.0	100.0
	2'-3"	100.0	100.0	91.0	100.0	91.0	100.0
	2'-6"	100.0	100.0	81.9	100.0	81.9	100.0
	2'-9"	91.3	91.3	74.5	91.3	74.5	100.0
	3'-3"	77.2	77.2	63.0	77.2	63.0	87.4
12'-0"	1'-9"	100.0	100.0	100.0	100.0	100.0	100.0
	2'-0"	100.0	100.0	98.1	100.0	98.1	100.0
	2'-3"	100.0	100.0	87.2	100.0	87.2	100.0
	2'-6"	96.2	96.2	78.5	96.2	78.5	100.0
	2'-9"	87.5	87.5	71.4	87.5	71.4	99.0
	3'-3"	74.0	74.0	60.4	74.0	60.4	83.8
12'-6"	1'-9"	100.0	100.0	100.0	100.0	100.0	100.0
	2'-0"	100.0	100.0	94.2	100.0	94.2	100.0
	2'-3"	100.0	100.0	83.7	100.0	83.7	100.0
	2'-6"	92.4	92.4	75.4	92.4	75.4	100.0
	2'-9"	84.0	84.0	68.5	84.0	68.5	95.1
	3'-3"	71.1	71.1	58.0	71.1	58.0	80.5

OPTION #3 : 4 FASTENERS CONNECTION

MAXIMUM MULLION SPAN	EFFECTIVE SPACING b = S_5 /2 *	MAXIMUM A.S.D. DESIGN PRESSURE RATING (psf)					
		POURED CONCRETE (Min. f'c = 3ksi) SUBSTRATE			GROUT FILLED CONCRETE BLOCK SUBSTRATE		1/4" Min. THK ASTM A-36 STEEL SUBSTRATE
		FASTENER TYPES			FASTENER TYPES		FASTENER
"L" (Ft-in)	"b" (Ft-in)	E	F	G	H	I	J
8'-5"	1'-9"	100.0	100.0	100.0	100.0	100.0	100.0
	2'-0"	100.0	100.0	100.0	100.0	100.0	100.0
	2'-3"	100.0	100.0	100.0	100.0	100.0	100.0
	2'-6"	100.0	100.0	100.0	100.0	100.0	100.0
	2'-9"	100.0	100.0	100.0	100.0	100.0	100.0
	3'-3"	100.0	100.0	100.0	100.0	100.0	100.0
8'-6"	1'-9"	100.0	100.0	100.0	100.0	100.0	100.0
	2'-0"	100.0	100.0	100.0	100.0	100.0	100.0
	2'-3"	100.0	100.0	100.0	100.0	100.0	100.0
	2'-6"	100.0	100.0	100.0	100.0	100.0	100.0
	2'-9"	100.0	100.0	100.0	100.0	100.0	100.0
	3'-3"	100.0	100.0	100.0	100.0	100.0	100.0
9'-0"	1'-9"	100.0	100.0	100.0	100.0	100.0	100.0
	2'-0"	100.0	100.0	100.0	100.0	100.0	100.0
	2'-3"	100.0	100.0	100.0	100.0	100.0	100.0
	2'-6"	100.0	100.0	100.0	100.0	100.0	100.0
	2'-9"	100.0	100.0	100.0	100.0	100.0	100.0
	3'-3"	100.0	100.0	100.0	100.0	100.0	100.0
9'-6"	1'-9"	100.0	100.0	100.0	100.0	100.0	100.0
	2'-0"	100.0	100.0	100.0	100.0	100.0	100.0
	2'-3"	100.0	100.0	100.0	100.0	100.0	100.0
	2'-6"	100.0	100.0	100.0	100.0	100.0	100.0
	2'-9"	100.0	100.0	100.0	100.0	100.0	100.0
	3'-3"	100.0	100.0	100.0	100.0	100.0	100.0
10'-0"	1'-9"	100.0	100.0	100.0	100.0	100.0	100.0
	2'-0"	100.0	100.0	100.0	100.0	100.0	100.0
	2'-3"	100.0	100.0	100.0	100.0	100.0	100.0
	2'-6"	100.0	100.0	100.0	100.0	100.0	100.0
	2'-9"	100.0	100.0	100.0	100.0	100.0	100.0
	3'-3"	100.0	100.0	96.6	100.0	96.6	100.0
10'-6"	1'-9"	100.0	100.0	100.0	100.0	100.0	100.0
	2'-0"	100.0	100.0	100.0	100.0	100.0	100.0
	2'-3"	100.0	100.0	100.0	100.0	100.0	100.0
	2'-6"	100.0	100.0	100.0	100.0	100.0	100.0
	2'-9"	100.0	100.0	100.0	100.0	100.0	100.0
	3'-3"	100.0	100.0	92.0	100.0	92.0	100.0
11'-0"	1'-9"	100.0	100.0	100.0	100.0	100.0	100.0
	2'-0"	100.0	100.0	100.0	100.0	100.0	100.0
	2'-3"	100.0	100.0	100.0	100.0	100.0	100.0
	2'-6"	100.0	100.0	100.0	100.0	100.0	100.0
	2'-9"	100.0	100.0	100.0	100.0	100.0	100.0
	3'-3"	100.0	100.0	87.8	100.0	87.8	100.0
11'-6"	1'-9"	100.0	100.0	100.0	100.0	100.0	100.0
	2'-0"	100.0	100.0	100.0	100.0	100.0	100.0
	2'-3"	100.0	100.0	100.0	100.0	100.0	100.0
	2'-6"	100.0	100.0	100.0	100.0	100.0	100.0
	2'-9"	100.0	100.0	99.3	100.0	99.3	100.0
	3'-3"	100.0	100.0	84.0	100.0	84.0	100.0
12'-0"	1'-9"	100.0	100.0	100.0	100.0	100.0	100.0
	2'-0"	100.0	100.0	100.0	100.0	100.0	100.0
	2'-3"	100.0	100.0	100.0	100.0	100.0	100.0
	2'-6"	100.0	100.0	100.0	100.0	100.0	100.0
	2'-9"	100.0	100.0	95.2	100.0	95.2	100.0
	3'-3"	98.7	98.7	80.5	98.7	80.5	100.0
12'-6"	1'-9"	100.0	100.0	100.0	100.0	100.0	100.0
	2'-0"	100.0	100.0	100.0	100.0	100.0	100.0
	2'-3"	100.0	100.0	100.0	100.0	100.0	100.0
	2'-6"	100.0	100.0	100.0	100.0	100.0	100.0
	2'-9"	100.0	100.0	91.4	100.0	91.4	100.0
	3'-3"	94.8	94.8	77.3	94.8	77.3	100.0

* SEE SHEET 9 FOR EFFECTIVE SPACING DEFINITION AT ISOMETRIC.

OPTION # 1 (ELEVATION)
(2) FASTENERS CONNECTION

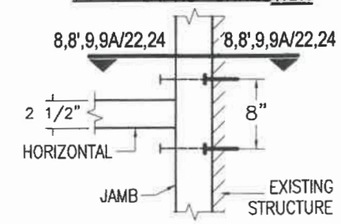

OPTION # 2 (ELEVATION)
(3) FASTENERS CONNECTION

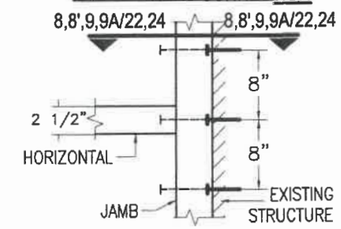

OPTION # 3 (ELEVATION)
(4) FASTENERS CONNECTION

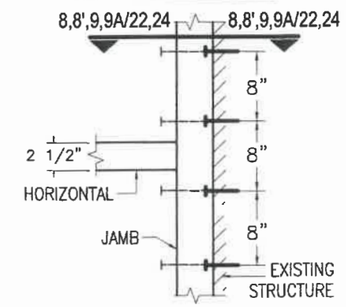

B FASTENER TYPES REQUIREMENTS:

E - 3/8"Ø HILTI KWIK BOLT TZ ANCHOR W/ 2" Min. EMBEDMENT INTO POURED CONCRETE (Min. f'c = 3 ksi) BEYOND ANY FINISH MATERIAL, W/ 4" MIN. EDGE DISTANCE.

F - 3/8"Ø HILTI KWIK BOLT 3 ANCHOR W/ 2 1/2" Min. EMBEDMENT INTO POURED CONCRETE (Min. f'c = 3 ksi) BEYOND ANY FINISH MATERIAL, W/ 4" MIN. EDGE DISTANCE.

G - 3/8"Ø HILTI HUS-H SCREW ANCHOR W/ 2 3/4" Min. EMBEDMENT INTO POURED CONCRETE (Min. f'c = 3 ksi) BEYOND ANY FINISH MATERIAL, W/ 3 3/4" MIN. EDGE DISTANCE.

H - 3/8"Ø HILTI KWIK BOLT 3 ANCHOR W/ 2 1/2" Min. EMBEDMENT INTO GROUT FILLED CONCRETE BLOCK BEYOND ANY FINISH MATERIAL, W/ 4" MIN. EDGE DISTANCE.

I - 3/8"Ø HILTI HUS-H SCREW ANCHOR W/ 3 1/4" Min. EMBEDMENT INTO GROUT FILLED CONCRETE BLOCK BEYOND ANY FINISH MATERIAL, W/ 4" MIN. EDGE DISTANCE.

J - 3/8"Ø-13 TYPE "F" GRADE 5 BOLT TO 1/4" MIN. THK. ASTM A-36 STEEL W/ 1" MIN. EDGE DISTANCE OR 3/8"Ø-13 SAE GRADE 5, GALVANIZED STEEL BOLT W/ LOCK WASHER & NUT TO 1/4" Min. THK. ASTM A-36 STEEL & MIN. E.D. = 3/4".

FLORIDA BUILDING CODE (High & Non High Velocity Hurricane Zone)

©2021 TILTECO, INC

TILTECO INC.
TILLIT TESTING & ENGINEERING COMPANY
6355 N.W. 36th. St., Ste. 305, VIRGINIA GARDENS, FLORIDA 33166
Phone : (305)871-1530 . Fax : (305)871-1531
e-mail: tilteco@aol.com
CA-0006719
WALTER A. TILLIT JR., P.E.
FLORIDA Lic. # 44167

SEAL/SIGNATURE/DATE

WALTER A. TILLIT JR. LICENSE No. 44167 STATE OF FLORIDA PROFESSIONAL ENGINEER

HR-251 CAPTURED CURTAIN WALL SYSTEM
LARGE & SMALL MISSILE IMPACT INSULATED GLASS

Oldcastle BuildingEnvelope™
803 Airport Rd - Terrell, TX 75160
www.OldcastleBE.com - Phone 800-869-4567

REV. No	DESCRIPTION	DATE
1	OLD 18-032	04/15/21
2		
3		
4		

M.P	DRAWN BY
04/15/2021	DATE
21-058	DRAWING No
SHEET 14A OF 36	

MAXIMUM A.S.D. DESIGN PRESSURE RATING FOR JAMBS AT TWIN SPAN CURTAIN WALL FASTENED TO EXISTING STRUCTURE W/ 3/8"Ø FASTENERS (CONTINUED): LARGE & SMALL MISSILE INSTALLATION

OPTION #1 : 2 FASTENERS CONNECTION

MAXIMUM MULLION SPAN	EFFECTIVE SPACING b = S_s /2 *	MAXIMUM A.S.D. DESIGN PRESSURE RATING (psf)					
		POURED CONCRETE (Min. f'c = 3ksi) SUBSTRATE			GROUT FILLED CONCRETE BLOCK SUBSTRATE		1/4" Min. THK ASTM A-36 STEEL SUBSTRATE
		FASTENER TYPES			FASTENER TYPES		FASTENER
"L" (Ft-in)	"b" (Ft-in)	E	F	G	H	I	J
	1'-9"	54.4	54.4	44.4	54.4	44.4	61.6
	2'-0"	47.6	47.6	38.8	47.6	38.8	53.9
8'-5"	2'-3"	42.3	42.3	34.5	42.3	34.5	47.9
	2'-6"	38.1	38.1	31.1	38.1	31.1	43.1
	2'-9"	34.6	34.6	28.2	34.6	28.2	39.2
	1'-9"	54.3	54.3	44.3	54.3	44.3	61.4
	2'-0"	47.5	47.5	38.7	47.5	38.7	53.7
8'-6"	2'-3"	42.2	42.2	34.4	42.2	34.4	47.8
	2'-6"	38.0	38.0	31.0	38.0	31.0	43.0
	2'-9"	34.5	34.5	28.2	34.5	28.2	39.1
	1'-9"	53.2	53.2	43.4	53.2	43.4	60.2
	2'-0"	46.5	46.5	38.0	46.5	38.0	52.7
9'-0"	2'-3"	41.4	41.4	33.7	41.4	33.7	46.8
	2'-6"	37.2	37.2	30.4	37.2	30.4	42.1
	2'-9"	33.8	33.8	27.6	33.8	27.6	38.3
	1'-9"	51.8	51.8	42.2	51.8	42.2	58.6
	2'-0"	45.3	45.3	37.0	45.3	37.0	51.3
9'-6"	2'-3"	40.3	40.3	32.8	40.3	32.8	45.6
	2'-6"	36.2	36.2	29.6	36.2	29.6	41.0
	2'-9"	32.9	32.9	26.9	32.9	26.9	37.3
	1'-9"	50.2	50.2	41.0	50.2	41.0	56.8
	2'-0"	43.9	43.9	35.8	43.9	35.8	49.7
10'-0"	2'-3"	39.1	39.1	31.9	39.1	31.9	44.2
	2'-6"	35.1	35.1	28.7	35.1	28.7	39.8
	2'-9"	32.0	32.0	26.1	32.0	26.1	36.2
	1'-9"	48.6	48.6	39.6	48.6	39.6	55.0
	2'-0"	42.5	42.5	34.7	42.5	34.7	48.1
10'-6"	2'-3"	37.8	37.8	30.8	37.8	30.8	42.8
	2'-6"	34.0	34.0	27.8	34.0	27.8	38.5
	2'-9"	30.9	30.9	25.2	30.9	25.2	35.0
	1'-9"	47.0	47.0	38.3	47.0	38.3	53.2
	2'-0"	41.1	41.1	33.5	41.1	33.5	46.5
11'-0"	2'-3"	36.5	36.5	29.8	36.5	29.8	41.4
	2'-6"	32.9	32.9	26.8	32.9	26.8	37.2
	2'-9"	29.9	29.9	24.4	29.9	24.4	33.9
	1'-9"	45.4	45.4	37.0	45.4	37.0	51.4
	2'-0"	39.7	39.7	32.4	39.7	32.4	45.0
11'-6"	2'-3"	35.3	35.3	28.8	35.3	28.8	40.0
	2'-6"	31.8	31.8	25.9	31.8	25.9	36.0
	2'-9"	28.9	28.9	23.6	28.9	23.6	32.7
	1'-9"	43.9	43.9	35.8	43.9	35.8	49.7
	2'-0"	38.4	38.4	31.3	38.4	31.3	43.5
12'-0"	2'-3"	34.1	34.1	27.8	34.1	27.8	38.6
	2'-6"	30.7	30.7	25.1	30.7	25.1	34.8
	2'-9"	27.9	27.9	22.8	27.9	22.8	31.6
	1'-9"	42.4	42.4	34.6	42.4	34.6	48.0
	2'-0"	37.1	37.1	30.3	37.1	30.3	42.0
12'-6"	2'-3"	33.0	33.0	26.9	33.0	26.9	37.4
	2'-6"	29.7	29.7	24.2	29.7	24.2	33.6
	2'-9"	27.0	27.0	22.0	27.0	22.0	30.6

OPTION #2 : 3 FASTENERS CONNECTION

MAXIMUM MULLION SPAN	EFFECTIVE SPACING b = S_s /2 *	MAXIMUM A.S.D. DESIGN PRESSURE RATING (psf)					
		POURED CONCRETE (Min. f'c = 3ksi) SUBSTRATE			GROUT FILLED CONCRETE BLOCK SUBSTRATE		1/4" Min. THK ASTM A-36 STEEL SUBSTRATE
		FASTENER TYPES			FASTENER TYPES		FASTENER
"L" (Ft-in)	"b" (Ft-in)	E	F	G	H	I	J
	1'-9"	81.6	81.6	66.5	81.6	66.5	90.0
	2'-0"	71.4	71.4	58.2	71.4	58.2	80.8
8'-5"	2'-3"	63.4	63.4	51.8	63.4	51.8	71.8
	2'-6"	57.1	57.1	46.6	57.1	46.6	64.6
	2'-9"	51.9	51.9	42.3	51.9	42.3	58.8
	1'-9"	81.4	81.4	66.4	81.4	66.4	90.0
	2'-0"	71.2	71.2	58.1	71.2	58.1	80.6
8'-6"	2'-3"	63.3	63.3	51.6	63.3	51.6	71.7
	2'-6"	57.0	57.0	46.5	57.0	46.5	64.5
	2'-9"	51.8	51.8	42.2	51.8	42.2	58.6
	1'-9"	79.8	79.8	65.1	79.8	65.1	90.0
	2'-0"	69.8	69.8	56.9	69.8	56.9	79.0
9'-0"	2'-3"	62.0	62.0	50.6	62.0	50.6	70.2
	2'-6"	55.8	55.8	45.5	55.8	45.5	63.2
	2'-9"	50.8	50.8	41.4	50.8	41.4	57.5
	1'-9"	77.6	77.6	63.3	77.6	63.3	87.9
	2'-0"	67.9	67.9	55.4	67.9	55.4	76.9
9'-6"	2'-3"	60.4	60.4	49.3	60.4	49.3	68.4
	2'-6"	54.4	54.4	44.3	54.4	44.3	61.5
	2'-9"	49.4	49.4	40.3	49.4	40.3	55.9
	1'-9"	75.3	75.3	61.4	75.3	61.4	85.3
	2'-0"	65.9	65.9	53.8	65.9	53.8	74.6
10'-0"	2'-3"	58.6	58.6	47.8	58.6	47.8	66.3
	2'-6"	52.7	52.7	43.0	52.7	43.0	59.7
	2'-9"	47.9	47.9	39.1	47.9	39.1	54.3
	1'-9"	72.9	72.9	59.5	72.9	59.5	82.5
	2'-0"	63.8	63.8	52.0	63.8	52.0	72.2
10'-6"	2'-3"	56.7	56.7	46.3	56.7	46.3	64.2
	2'-6"	51.0	51.0	41.6	51.0	41.6	57.8
	2'-9"	46.4	46.4	37.8	46.4	37.8	52.5
	1'-9"	70.5	70.5	57.5	70.5	57.5	79.8
	2'-0"	61.7	61.7	50.3	61.7	50.3	69.8
11'-0"	2'-3"	54.8	54.8	44.7	54.8	44.7	62.1
	2'-6"	49.3	49.3	40.3	49.3	40.3	55.9
	2'-9"	44.9	44.9	36.6	44.9	36.6	50.8
	1'-9"	68.1	68.1	55.6	68.1	55.6	77.1
	2'-0"	59.6	59.6	48.6	59.6	48.6	67.5
11'-6"	2'-3"	53.0	53.0	43.2	53.0	43.2	60.0
	2'-6"	47.7	47.7	38.9	47.7	38.9	54.0
	2'-9"	43.3	43.3	35.4	43.3	35.4	49.1
	1'-9"	65.8	65.8	53.7	65.8	53.7	74.5
	2'-0"	57.6	57.6	47.0	57.6	47.0	65.2
12'-0"	2'-3"	51.2	51.2	41.8	51.2	41.8	58.0
	2'-6"	46.1	46.1	37.6	46.1	37.6	52.2
	2'-9"	41.9	41.9	34.2	41.9	34.2	47.4
	1'-9"	63.6	63.6	51.9	63.6	51.9	72.0
	2'-0"	55.7	55.7	45.4	55.7	45.4	63.0
12'-6"	2'-3"	49.5	49.5	40.4	49.5	40.4	56.0
	2'-6"	44.5	44.5	36.3	44.5	36.3	50.4
	2'-9"	40.5	40.5	33.0	40.5	33.0	45.8

OPTION #3 : 4 FASTENERS CONNECTION

MAXIMUM MULLION SPAN	EFFECTIVE SPACING b = S_s /2 *	MAXIMUM A.S.D. DESIGN PRESSURE RATING (psf)					
		POURED CONCRETE (Min. f'c = 3ksi) SUBSTRATE			GROUT FILLED CONCRETE BLOCK SUBSTRATE		1/4" Min. THK ASTM A-36 STEEL SUBSTRATE
		FASTENER TYPES			FASTENER TYPES		FASTENER
"L" (Ft-in)	"b" (Ft-in)	E	F	G	H	I	J
	1'-9"	90.0	90.0	88.7	90.0	88.7	90.0
	2'-0"	90.0	90.0	77.6	90.0	77.6	90.0
8'-5"	2'-3"	84.6	84.6	69.0	84.6	69.0	90.0
	2'-6"	76.1	76.1	62.1	76.1	62.1	86.2
	2'-9"	69.2	69.2	56.5	69.2	56.5	78.4
	1'-9"	90.0	90.0	88.5	90.0	88.5	90.0
	2'-0"	90.0	90.0	77.5	90.0	77.5	90.0
8'-6"	2'-3"	84.4	84.4	68.8	84.4	68.8	90.0
	2'-6"	76.0	76.0	62.0	76.0	62.0	86.0
	2'-9"	69.0	69.0	56.3	69.0	56.3	78.2
	1'-9"	90.0	90.0	86.7	90.0	86.7	90.0
	2'-0"	90.0	90.0	75.9	90.0	75.9	90.0
9'-0"	2'-3"	82.7	82.7	67.5	82.7	67.5	90.0
	2'-6"	74.4	74.4	60.7	74.4	60.7	84.3
	2'-9"	67.7	67.7	55.2	67.7	55.2	76.6
	1'-9"	90.0	90.0	84.5	90.0	84.5	90.0
	2'-0"	90.0	90.0	73.9	90.0	73.9	90.0
9'-6"	2'-3"	80.5	80.5	65.7	80.5	65.7	90.0
	2'-6"	72.5	72.5	59.1	72.5	59.1	82.0
	2'-9"	65.9	65.9	53.7	65.9	53.7	74.6
	1'-9"	90.0	90.0	81.9	90.0	81.9	90.0
	2'-0"	87.9	87.9	71.7	87.9	71.7	90.0
10'-0"	2'-3"	78.1	78.1	63.7	78.1	63.7	88.4
	2'-6"	70.3	70.3	57.3	70.3	57.3	79.6
	2'-9"	63.9	63.9	52.1	63.9	52.1	72.3
	1'-9"	90.0	90.0	79.3	90.0	79.3	90.0
	2'-0"	85.1	85.1	69.4	85.1	69.4	90.0
10'-6"	2'-3"	75.6	75.6	61.7	75.6	61.7	85.6
	2'-6"	68.0	68.0	55.5	68.0	55.5	77.0
	2'-9"	61.9	61.9	50.5	61.9	50.5	70.0
	1'-9"	90.0	90.0	76.7	90.0	76.7	90.0
	2'-0"	82.2	82.2	67.1	82.2	67.1	90.0
11'-0"	2'-3"	73.1	73.1	59.6	73.1	59.6	82.7
	2'-6"	65.8	65.8	53.7	65.8	53.7	74.5
	2'-9"	59.8	59.8	48.8	59.8	48.8	67.7
	1'-9"	90.0	90.0	74.1	90.0	74.1	90.0
	2'-0"	79.5	79.5	64.8	79.5	64.8	90.0
11'-6"	2'-3"	70.6	70.6	57.6	70.6	57.6	80.0
	2'-6"	63.6	63.6	51.9	63.6	51.9	72.0
	2'-9"	57.8	57.8	47.2	57.8	47.2	65.4
	1'-9"	87.8	87.8	71.6	87.8	71.6	90.0
	2'-0"	76.8	76.8	62.7	76.8	62.7	86.9
12'-0"	2'-3"	68.3	68.3	55.7	68.3	55.7	77.3
	2'-6"	61.4	61.4	50.1	61.4	50.1	69.6
	2'-9"	55.9	55.9	45.6	55.9	45.6	63.2
	1'-9"	84.8	84.8	69.2	84.8	69.2	90.0
	2'-0"	74.2	74.2	60.6	74.2	60.6	84.0
12'-6"	2'-3"	66.0	66.0	53.8	66.0	53.8	74.7
	2'-6"	59.4	59.4	48.5	59.4	48.5	67.2
	2'-9"	54.0	54.0	44.0	54.0	44.0	61.1

* SEE SHEET 10 FOR EFFECTIVE SPACING DEFINITION AT ISOMETRIC.

OPTION # 1 (ELEVATION)
(2) FASTENERS CONNECTION

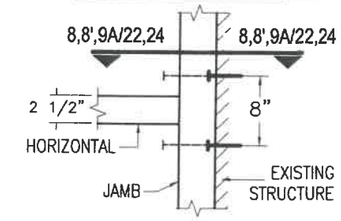

OPTION # 2 (ELEVATION)
(3) FASTENERS CONNECTION

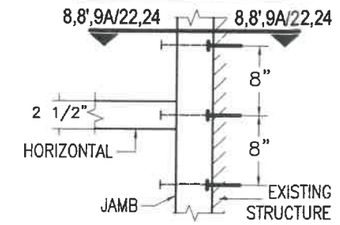

OPTION # 3 (ELEVATION)
(4) FASTENERS CONNECTION

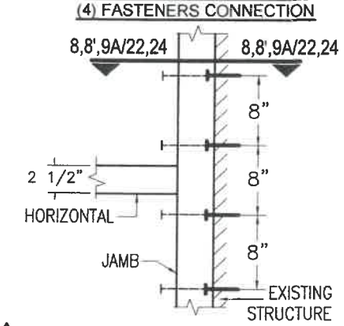

B FASTENER TYPES REQUIREMENTS:

E - 3/8"Ø HILTI KWIK BOLT TZ ANCHOR W/ 2" Min. EMBEDMENT INTO POURED CONCRETE (Min. f'c = 3 ksi) BEYOND ANY FINISH MATERIAL, W/ 4" MIN. EDGE DISTANCE.

F - 3/8"Ø HILTI KWIK BOLT 3 ANCHOR W/ 2 1/2" Min. EMBEDMENT INTO POURED CONCRETE (Min. f'c = 3 ksi) BEYOND ANY FINISH MATERIAL, W/ 4" MIN. EDGE DISTANCE.

G - 3/8"Ø HILTI HUS-H SCREW ANCHOR W/ 2 3/4" Min. EMBEDMENT INTO POURED CONCRETE (Min. f'c = 3 ksi) BEYOND ANY FINISH MATERIAL, W/ 3 3/4" MIN. EDGE DISTANCE.

H - 3/8"Ø HILTI KWIK BOLT 3 ANCHOR W/ 2 1/2" Min. EMBEDMENT INTO GROUT FILLED CONCRETE BLOCK BEYOND ANY FINISH MATERIAL, W/ 4" MIN. EDGE DISTANCE.

I - 3/8"Ø HILTI HUS-H SCREW ANCHOR W/ 3 1/4" Min. EMBEDMENT INTO GROUT FILLED CONCRETE BLOCK BEYOND ANY FINISH MATERIAL, W/ 4" MIN. EDGE DISTANCE.

J - 3/8"Ø-13 TYPE "F" GRADE 5 BOLT TO 1/4" MIN. THK. ASTM A-36 STEEL W/ 1" MIN. EDGE DISTANCE OR 3/8"Ø-13 SAE GRADE 5, GALVANIZED STEEL BOLT W/ LOCK WASHER & NUT TO 1/4" Min. THK. ASTM A-36 STEEL & MIN. E.D. = 3/4".

FLORIDA BUILDING CODE (High & Non High Velocity Hurricane Zone)

©2021 TILTECO, INC

TILTECO INC.
TILLIT TESTING & ENGINEERING COMPANY
6355 N.W. 36th. St., Ste. 305, VIRGINIA GARDENS, FLORIDA 33166
Phone : (305)871-1531 . Fax : (305)871-1530
e-mail: tilteco@aol.com
CA-0006719
WALTER A. TILLIT Jr., P.E.
FLORIDA Lic. # 44167

HR-251 CAPTURED CURTAIN WALL SYSTEM
LARGE & SMALL MISSILE IMPACT INSULATED GLASS

Oldcastle BuildingEnvelope™
803 Airport Rd - Terrell, TX 75160
www.OldcastleBE.com - Phone 800-869-4567

REV. No	DESCRIPTION	DATE
1	OLD 18-032	04/15/21
2		
3		
4		

M.P DRAWN BY

04/15/2021 DATE

21-058 DRAWING No

SHEET 15 OF 36

SEAL/SIGNATURE/DATE

WALTER A. TILLIT JR. LICENSE No. 44167 STATE OF FLORIDA PROFESSIONAL ENGINEER

04/15/2021

MAXIMUM A.S.D. DESIGN PRESSURE RATING FOR JAMBS AT SINGLE SPAN CURTAIN WALL FASTENED TO EXISTING STRUCTURE W/ 1/2"Ø FASTENERS (CONTINUED): VALID ONLY FOR LARGE MISSILE INSTALLATION

OPTION #1 : 2 FASTENERS CONNECTION

MAXIMUM MULLION SPAN	EFFECTIVE SPACING b = S_s /2 *	MAXIMUM A.S.D. DESIGN PRESSURE RATING (psf)					
		POURED CONCRETE (Min. fc = 3ksi) SUBSTRATE			GROUT FILLED CONCRETE BLOCK SUBSTRATE		1/4" Min. THK ASTM A-36 STEEL SUBSTRATE
		FASTENER TYPES			FASTENER TYPES		FASTENER
"L" (Ft-in)	"b" (Ft-in)	K	L	M	N	O	P
	1' - 9"	100.0	100.0	100.0	100.0	100.0	100.0
	2' - 0"	100.0	100.0	100.0	100.0	100.0	100.0
8' - 5"	2' - 3"	100.0	100.0	100.0	100.0	100.0	100.0
	2' - 6"	100.0	100.0	100.0	100.0	90.3	100.0
	2' - 9"	100.0	100.0	100.0	100.0	82.1	100.0
	3' - 3"	100.0	100.0	100.0	100.0	69.5	100.0
	1' - 9"	100.0	100.0	100.0	100.0	100.0	100.0
	2' - 0"	100.0	100.0	100.0	100.0	100.0	100.0
8' - 6"	2' - 3"	100.0	100.0	100.0	100.0	99.3	100.0
	2' - 6"	100.0	100.0	100.0	100.0	89.4	100.0
	2' - 9"	100.0	100.0	100.0	100.0	81.3	100.0
	3' - 3"	100.0	100.0	100.0	100.0	68.8	100.0
	1' - 9"	100.0	100.0	100.0	100.0	100.0	100.0
	2' - 0"	100.0	100.0	100.0	100.0	100.0	100.0
9' - 0"	2' - 3"	100.0	100.0	100.0	100.0	93.8	100.0
	2' - 6"	100.0	100.0	100.0	100.0	84.4	100.0
	2' - 9"	100.0	100.0	100.0	100.0	76.8	100.0
	3' - 3"	100.0	100.0	100.0	100.0	65.0	100.0
	1' - 9"	100.0	100.0	100.0	100.0	100.0	100.0
	2' - 0"	100.0	100.0	100.0	100.0	100.0	100.0
9' - 6"	2' - 3"	100.0	100.0	100.0	100.0	88.9	100.0
	2' - 6"	100.0	100.0	100.0	100.0	80.0	100.0
	2' - 9"	100.0	100.0	100.0	100.0	72.7	100.0
	3' - 3"	100.0	100.0	100.0	100.0	61.5	100.0
	1' - 9"	100.0	100.0	100.0	100.0	100.0	100.0
	2' - 0"	100.0	100.0	100.0	100.0	95.0	100.0
10' - 0"	2' - 3"	100.0	100.0	100.0	100.0	84.4	100.0
	2' - 6"	100.0	100.0	100.0	100.0	76.0	100.0
	2' - 9"	100.0	100.0	100.0	100.0	69.1	100.0
	3' - 3"	100.0	100.0	100.0	100.0	58.5	100.0
	1' - 9"	100.0	100.0	100.0	100.0	100.0	100.0
	2' - 0"	100.0	100.0	100.0	100.0	90.5	100.0
10' - 6"	2' - 3"	100.0	100.0	100.0	100.0	80.4	100.0
	2' - 6"	100.0	100.0	100.0	100.0	72.4	100.0
	2' - 9"	100.0	100.0	100.0	100.0	65.8	100.0
	3' - 3"	100.0	100.0	100.0	100.0	55.7	100.0
	1' - 9"	100.0	100.0	100.0	100.0	98.7	100.0
	2' - 0"	100.0	100.0	100.0	100.0	86.4	100.0
11' - 0"	2' - 3"	100.0	100.0	100.0	100.0	76.8	100.0
	2' - 6"	100.0	100.0	100.0	100.0	69.1	100.0
	2' - 9"	100.0	100.0	100.0	100.0	62.8	100.0
	3' - 3"	100.0	100.0	100.0	96.7	53.1	100.0
	1' - 9"	100.0	100.0	100.0	100.0	94.4	100.0
	2' - 0"	100.0	100.0	100.0	100.0	82.6	100.0
11' - 6"	2' - 3"	100.0	100.0	100.0	100.0	73.4	100.0
	2' - 6"	100.0	100.0	100.0	100.0	66.1	100.0
	2' - 9"	100.0	100.0	100.0	100.0	60.1	100.0
	3' - 3"	100.0	100.0	100.0	92.5	50.8	100.0
	1' - 9"	100.0	100.0	100.0	100.0	90.5	100.0
	2' - 0"	100.0	100.0	100.0	100.0	79.2	100.0
12' - 0"	2' - 3"	100.0	100.0	100.0	100.0	70.4	100.0
	2' - 6"	100.0	100.0	100.0	100.0	63.3	100.0
	2' - 9"	100.0	100.0	100.0	100.0	57.6	100.0
	3' - 3"	100.0	100.0	100.0	88.6	48.7	100.0
	1' - 9"	100.0	100.0	100.0	100.0	86.9	100.0
	2' - 0"	100.0	100.0	100.0	100.0	76.0	100.0
12' - 6"	2' - 3"	100.0	100.0	100.0	100.0	67.6	100.0
	2' - 6"	100.0	100.0	100.0	100.0	60.8	100.0
	2' - 9"	100.0	100.0	100.0	100.0	55.3	100.0
	3' - 3"	100.0	100.0	100.0	85.1	46.8	100.0

OPTION #2 : 3 FASTENERS CONNECTION

MAXIMUM MULLION SPAN	EFFECTIVE SPACING b = S_s /2 *	MAXIMUM A.S.D. DESIGN PRESSURE RATING (psf)					
		POURED CONCRETE (Min. fc = 3ksi) SUBSTRATE			GROUT FILLED CONCRETE BLOCK SUBSTRATE		1/4" Min. THK ASTM A-36 STEEL SUBSTRATE
		FASTENER TYPES			FASTENER TYPES		FASTENER
"L" (Ft-in)	"b" (Ft-in)	K	L	M	N	O	P
	1' - 9"	100.0	100.0	100.0	100.0	100.0	100.0
	2' - 0"	100.0	100.0	100.0	100.0	100.0	100.0
8' - 5"	2' - 3"	100.0	100.0	100.0	100.0	100.0	100.0
	2' - 6"	100.0	100.0	100.0	100.0	100.0	100.0
	2' - 9"	100.0	100.0	100.0	100.0	100.0	100.0
	3' - 3"	100.0	100.0	100.0	100.0	100.0	100.0
	1' - 9"	100.0	100.0	100.0	100.0	100.0	100.0
	2' - 0"	100.0	100.0	100.0	100.0	100.0	100.0
8' - 6"	2' - 3"	100.0	100.0	100.0	100.0	100.0	100.0
	2' - 6"	100.0	100.0	100.0	100.0	100.0	100.0
	2' - 9"	100.0	100.0	100.0	100.0	100.0	100.0
	3' - 3"	100.0	100.0	100.0	100.0	100.0	100.0
	1' - 9"	100.0	100.0	100.0	100.0	100.0	100.0
	2' - 0"	100.0	100.0	100.0	100.0	100.0	100.0
9' - 0"	2' - 3"	100.0	100.0	100.0	100.0	100.0	100.0
	2' - 6"	100.0	100.0	100.0	100.0	100.0	100.0
	2' - 9"	100.0	100.0	100.0	100.0	100.0	100.0
	3' - 3"	100.0	100.0	100.0	100.0	97.4	100.0
	1' - 9"	100.0	100.0	100.0	100.0	100.0	100.0
	2' - 0"	100.0	100.0	100.0	100.0	100.0	100.0
9' - 6"	2' - 3"	100.0	100.0	100.0	100.0	100.0	100.0
	2' - 6"	100.0	100.0	100.0	100.0	100.0	100.0
	2' - 9"	100.0	100.0	100.0	100.0	100.0	100.0
	3' - 3"	100.0	100.0	100.0	100.0	92.3	100.0
	1' - 9"	100.0	100.0	100.0	100.0	100.0	100.0
	2' - 0"	100.0	100.0	100.0	100.0	100.0	100.0
10' - 0"	2' - 3"	100.0	100.0	100.0	100.0	100.0	100.0
	2' - 6"	100.0	100.0	100.0	100.0	100.0	100.0
	2' - 9"	100.0	100.0	100.0	100.0	100.0	100.0
	3' - 3"	100.0	100.0	100.0	100.0	87.7	100.0
	1' - 9"	100.0	100.0	100.0	100.0	100.0	100.0
	2' - 0"	100.0	100.0	100.0	100.0	100.0	100.0
10' - 6"	2' - 3"	100.0	100.0	100.0	100.0	100.0	100.0
	2' - 6"	100.0	100.0	100.0	100.0	100.0	100.0
	2' - 9"	100.0	100.0	100.0	100.0	98.7	100.0
	3' - 3"	100.0	100.0	100.0	100.0	83.5	100.0
	1' - 9"	100.0	100.0	100.0	100.0	100.0	100.0
	2' - 0"	100.0	100.0	100.0	100.0	100.0	100.0
11' - 0"	2' - 3"	100.0	100.0	100.0	100.0	100.0	100.0
	2' - 6"	100.0	100.0	100.0	100.0	100.0	100.0
	2' - 9"	100.0	100.0	100.0	100.0	94.2	100.0
	3' - 3"	100.0	100.0	100.0	100.0	79.7	100.0
	1' - 9"	100.0	100.0	100.0	100.0	100.0	100.0
	2' - 0"	100.0	100.0	100.0	100.0	100.0	100.0
11' - 6"	2' - 3"	100.0	100.0	100.0	100.0	100.0	100.0
	2' - 6"	100.0	100.0	100.0	100.0	99.1	100.0
	2' - 9"	100.0	100.0	100.0	100.0	90.1	100.0
	3' - 3"	100.0	100.0	100.0	100.0	76.3	100.0
	1' - 9"	100.0	100.0	100.0	100.0	100.0	100.0
	2' - 0"	100.0	100.0	100.0	100.0	100.0	100.0
12' - 0"	2' - 3"	100.0	100.0	100.0	100.0	100.0	100.0
	2' - 6"	100.0	100.0	100.0	100.0	95.0	100.0
	2' - 9"	100.0	100.0	100.0	100.0	86.4	100.0
	3' - 3"	100.0	100.0	100.0	100.0	73.1	100.0
	1' - 9"	100.0	100.0	100.0	100.0	100.0	100.0
	2' - 0"	100.0	100.0	100.0	100.0	100.0	100.0
12' - 6"	2' - 3"	100.0	100.0	100.0	100.0	100.0	100.0
	2' - 6"	100.0	100.0	100.0	100.0	91.2	100.0
	2' - 9"	100.0	100.0	100.0	100.0	82.9	100.0
	3' - 3"	100.0	100.0	100.0	100.0	70.2	100.0

OPTION #3 : 4 FASTENERS CONNECTION

MAXIMUM MULLION SPAN	EFFECTIVE SPACING b = S_s /2 *	MAXIMUM A.S.D. DESIGN PRESSURE RATING (psf)					
		POURED CONCRETE (Min. fc = 3ksi) SUBSTRATE			GROUT FILLED CONCRETE BLOCK SUBSTRATE		1/4" Min. THK ASTM A-36 STEEL SUBSTRATE
		FASTENER TYPES			FASTENER TYPES		FASTENER
"L" (Ft-in)	"b" (Ft-in)	K	L	M	N	O	P
	1' - 9"	100.0	100.0	100.0	100.0	100.0	100.0
	2' - 0"	100.0	100.0	100.0	100.0	100.0	100.0
8' - 5"	2' - 3"	100.0	100.0	100.0	100.0	100.0	100.0
	2' - 6"	100.0	100.0	100.0	100.0	100.0	100.0
	2' - 9"	100.0	100.0	100.0	100.0	100.0	100.0
	3' - 3"	100.0	100.0	100.0	100.0	100.0	100.0
	1' - 9"	100.0	100.0	100.0	100.0	100.0	100.0
	2' - 0"	100.0	100.0	100.0	100.0	100.0	100.0
8' - 6"	2' - 3"	100.0	100.0	100.0	100.0	100.0	100.0
	2' - 6"	100.0	100.0	100.0	100.0	100.0	100.0
	2' - 9"	100.0	100.0	100.0	100.0	100.0	100.0
	3' - 3"	100.0	100.0	100.0	100.0	100.0	100.0
	1' - 9"	100.0	100.0	100.0	100.0	100.0	100.0
	2' - 0"	100.0	100.0	100.0	100.0	100.0	100.0
9' - 0"	2' - 3"	100.0	100.0	100.0	100.0	100.0	100.0
	2' - 6"	100.0	100.0	100.0	100.0	100.0	100.0
	2' - 9"	100.0	100.0	100.0	100.0	100.0	100.0
	3' - 3"	100.0	100.0	100.0	100.0	100.0	100.0
	1' - 9"	100.0	100.0	100.0	100.0	100.0	100.0
	2' - 0"	100.0	100.0	100.0	100.0	100.0	100.0
9' - 6"	2' - 3"	100.0	100.0	100.0	100.0	100.0	100.0
	2' - 6"	100.0	100.0	100.0	100.0	100.0	100.0
	2' - 9"	100.0	100.0	100.0	100.0	100.0	100.0
	3' - 3"	100.0	100.0	100.0	100.0	100.0	100.0
	1' - 9"	100.0	100.0	100.0	100.0	100.0	100.0
	2' - 0"	100.0	100.0	100.0	100.0	100.0	100.0
10' - 0"	2' - 3"	100.0	100.0	100.0	100.0	100.0	100.0
	2' - 6"	100.0	100.0	100.0	100.0	100.0	100.0
	2' - 9"	100.0	100.0	100.0	100.0	100.0	100.0
	3' - 3"	100.0	100.0	100.0	100.0	100.0	100.0
	1' - 9"	100.0	100.0	100.0	100.0	100.0	100.0
	2' - 0"	100.0	100.0	100.0	100.0	100.0	100.0
10' - 6"	2' - 3"	100.0	100.0	100.0	100.0	100.0	100.0
	2' - 6"	100.0	100.0	100.0	100.0	100.0	100.0
	2' - 9"	100.0	100.0	100.0	100.0	100.0	100.0
	3' - 3"	100.0	100.0	100.0	100.0	100.0	100.0
	1' - 9"	100.0	100.0	100.0	100.0	100.0	100.0
	2' - 0"	100.0	100.0	100.0	100.0	100.0	100.0
11' - 0"	2' - 3"	100.0	100.0	100.0	100.0	100.0	100.0
	2' - 6"	100.0	100.0	100.0	100.0	100.0	100.0
	2' - 9"	100.0	100.0	100.0	100.0	100.0	100.0
	3' - 3"	100.0	100.0	100.0	100.0	100.0	100.0
	1' - 9"	100.0	100.0	100.0	100.0	100.0	100.0
	2' - 0"	100.0	100.0	100.0	100.0	100.0	100.0
11' - 6"	2' - 3"	100.0	100.0	100.0	100.0	100.0	100.0
	2' - 6"	100.0	100.0	100.0	100.0	100.0	100.0
	2' - 9"	100.0	100.0	100.0	100.0	100.0	100.0
	3' - 3"	100.0	100.0	100.0	100.0	100.0	100.0
	1' - 9"	100.0	100.0	100.0	100.0	100.0	100.0
	2' - 0"	100.0	100.0	100.0	100.0	100.0	100.0
12' - 0"	2' - 3"	100.0	100.0	100.0	100.0	100.0	100.0
	2' - 6"	100.0	100.0	100.0	100.0	100.0	100.0
	2' - 9"	100.0	100.0	100.0	100.0	100.0	100.0
	3' - 3"	100.0	100.0	100.0	100.0	97.4	100.0
	1' - 9"	100.0	100.0	100.0	100.0	100.0	100.0
	2' - 0"	100.0	100.0	100.0	100.0	100.0	100.0
12' - 6"	2' - 3"	100.0	100.0	100.0	100.0	100.0	100.0
	2' - 6"	100.0	100.0	100.0	100.0	100.0	100.0
	2' - 9"	100.0	100.0	100.0	100.0	100.0	100.0
	3' - 3"	100.0	100.0	100.0	100.0	93.5	100.0

* SEE SHEET 9 FOR EFFECTIVE SPACING DEFINITION AT ISOMETRIC.

OPTION # 1 (ELEVATION)
(2) FASTENERS CONNECTION

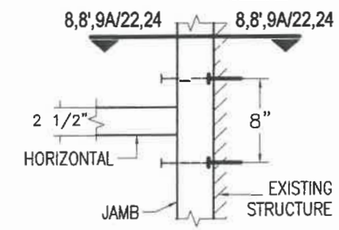

OPTION # 2 (ELEVATION)
(3) FASTENERS CONNECTION

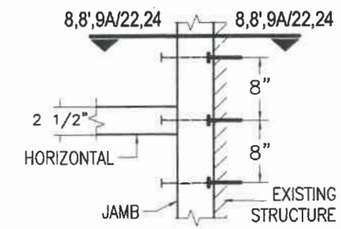

OPTION # 3 (ELEVATION)
(4) FASTENERS CONNECTION

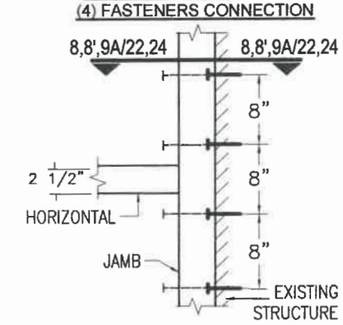

B FASTENER TYPES REQUIREMENTS:

K - 1/2"Ø HILTI KWIK BOLT TZ ANCHOR W/ 2" Min. EMBEDMENT INTO POURED CONCRETE (Min. f'c = 3 ksi) BEYOND ANY FINISH MATERIAL, W/ 4" MIN. EDGE DISTANCE.

L - 1/2"Ø HILTI KWIK BOLT 3 ANCHOR W/ 3 1/2" Min. EMBEDMENT INTO POURED CONCRETE (Min. f'c = 3 ksi) BEYOND ANY FINISH MATERIAL, W/ 4" MIN. EDGE DISTANCE.

M - 1/2"Ø HILTI HUS-H SCREW ANCHOR W/ 3" Min. EMBEDMENT INTO POURED CONCRETE (Min. f'c = 3 ksi) BEYOND ANY FINISH MATERIAL, W/ 4" MIN. EDGE DISTANCE.

N - 1/2"Ø HILTI KWIK BOLT 3 ANCHOR W/ 3 1/2" Min. EMBEDMENT INTO GROUT FILLED CONCRETE BLOCK BEYOND ANY FINISH MATERIAL, W/ 4" MIN. EDGE DISTANCE.

O - 1/2"Ø HILTI HUS-H SCREW ANCHOR W/ 3" Min. EMBEDMENT INTO GROUT FILLED CONCRETE BLOCK BEYOND ANY FINISH MATERIAL, W/ 4" MIN. EDGE DISTANCE.

P - 1/2"Ø-13 TYPE "F" GRADE 5 BOLT TO 1/4" MIN. THK. ASTM A-36 STEEL W/ 1" MIN. EDGE DISTANCE OR 1/2"Ø-13 SAE GRADE 5, GALVANIZED STEEL BOLT W/ LOCK WASHER & NUT TO 1/4" MIN. THK. ASTM A-36 STEEL & MIN. E.D. = 1".

FLORIDA BUILDING CODE (High & Non High Velocity Hurricane Zone)

HR-251 CAPTURED CURTAIN WALL SYSTEM
LARGE & SMALL MISSILE IMPACT INSULATED GLASS

M.P
DRAWN BY

04/15/2021
DATE

21-058
DRAWING No

SHEET 16 OF 36

Oldcastle BuildingEnvelope™
803 Airport Rd - Terrell, TX 75160
www.OldcastleBE.com - Phone 800-869-4567

REV. No	DESCRIPTION	DATE	REV. No	DESCRIPTION	DATE
1	OLD 18-032	04/15/21	3		
2			4		

©2021 TILTECO, INC

TILTECO INC.
TILLIT TESTING & ENGINEERING COMPANY
6355 N.W. 36th. St., Ste. 305, VIRGINIA GARDENS, FLORIDA 33166
Phone : (305)871-1530 . Fax : (305)871-1531
e-mail: tilteco@aol.com
CA-0006719
WALTER A. TILLIT Jr., P.E.
FLORIDA Lic. # 44167

SEAL/SIGNATURE/DATE

WALTER A. TILLIT JR. LICENSE No. 44167 STATE OF FLORIDA PROFESSIONAL ENGINEER

MAXIMUM A.S.D. PRESSURE RATING FOR JAMBS AT SINGLE SPAN CURTAIN WALL FASTENED TO EXISTING STRUCTURE W/ 1/2"Ø FASTENERS (CONTINUED)

VALID ONLY FOR SMALL MISSILE INSTALLATION

OPTION #1 : 2 FASTENERS CONNECTION

MAXIMUM MULLION SPAN	EFFECTIVE SPACING b = S_s/2 *	MAXIMUM A.S.D. DESIGN PRESSURE RATING (psf)					
		POURED CONCRETE (Min. f'c = 3ksi) SUBSTRATE			GROUT FILLED CONCRETE BLOCK SUBSTRATE		1/4" Min. THK ASTM A-36 STEEL SUBSTRATE
		FASTENER TYPES			FASTENER TYPES		FASTENER
"L" (Ft-in)	"b" (Ft-in)	K	L	M	N	O	P
	1'-9"	90.0	90.0	90.0	90.0	90.0	90.0
	2'-0"	90.0	90.0	90.0	90.0	90.0	90.0
8'-5"	2'-3"	90.0	90.0	90.0	90.0	90.0	90.0
	2'-6"	90.0	90.0	90.0	90.0	90.0	90.0
	2'-9"	90.0	90.0	90.0	90.0	82.1	90.0
	3'-3"	90.0	90.0	90.0	90.0	69.5	90.0
	1'-9"	90.0	90.0	90.0	90.0	90.0	90.0
	2'-0"	90.0	90.0	90.0	90.0	90.0	90.0
8'-6"	2'-3"	90.0	90.0	90.0	90.0	90.0	90.0
	2'-6"	90.0	90.0	90.0	90.0	89.4	90.0
	2'-9"	90.0	90.0	90.0	90.0	81.3	90.0
	3'-3"	90.0	90.0	90.0	90.0	68.8	90.0
	1'-9"	90.0	90.0	90.0	90.0	90.0	90.0
	2'-0"	90.0	90.0	90.0	90.0	90.0	90.0
9'-0"	2'-3"	90.0	90.0	90.0	90.0	90.0	90.0
	2'-6"	90.0	90.0	90.0	90.0	84.4	90.0
	2'-9"	90.0	90.0	90.0	90.0	76.8	90.0
	3'-3"	90.0	90.0	90.0	90.0	65.0	90.0
	1'-9"	90.0	90.0	90.0	90.0	90.0	90.0
	2'-0"	90.0	90.0	90.0	90.0	90.0	90.0
9'-6"	2'-3"	90.0	90.0	90.0	90.0	88.9	90.0
	2'-6"	90.0	90.0	90.0	90.0	80.0	90.0
	2'-9"	90.0	90.0	90.0	90.0	72.7	90.0
	3'-3"	90.0	90.0	90.0	90.0	61.5	90.0
	1'-9"	90.0	90.0	90.0	90.0	90.0	90.0
	2'-0"	90.0	90.0	90.0	90.0	90.0	90.0
10'-0"	2'-3"	90.0	90.0	90.0	90.0	84.4	90.0
	2'-6"	90.0	90.0	90.0	90.0	76.0	90.0
	2'-9"	90.0	90.0	90.0	90.0	69.1	90.0
	3'-3"	90.0	90.0	90.0	90.0	58.5	90.0
	1'-9"	90.0	90.0	90.0	90.0	90.0	90.0
	2'-0"	90.0	90.0	90.0	90.0	90.0	90.0
10'-6"	2'-3"	90.0	90.0	90.0	90.0	80.4	90.0
	2'-6"	90.0	90.0	90.0	90.0	72.4	90.0
	2'-9"	90.0	90.0	90.0	90.0	65.8	90.0
	3'-3"	90.0	90.0	90.0	90.0	55.7	90.0
	1'-9"	90.0	90.0	90.0	90.0	90.0	90.0
	2'-0"	90.0	90.0	90.0	90.0	86.4	90.0
11'-0"	2'-3"	90.0	90.0	90.0	90.0	76.8	90.0
	2'-6"	90.0	90.0	90.0	90.0	69.1	90.0
	2'-9"	90.0	90.0	90.0	90.0	62.8	90.0
	3'-3"	90.0	90.0	90.0	90.0	53.1	90.0
	1'-9"	90.0	90.0	90.0	90.0	90.0	90.0
	2'-0"	90.0	90.0	90.0	90.0	82.6	90.0
11'-6"	2'-3"	90.0	90.0	90.0	90.0	73.4	90.0
	2'-6"	90.0	90.0	90.0	90.0	66.1	90.0
	2'-9"	90.0	90.0	90.0	90.0	60.1	90.0
	3'-3"	90.0	90.0	90.0	90.0	50.8	90.0
	1'-9"	90.0	90.0	90.0	90.0	90.0	90.0
	2'-0"	90.0	90.0	90.0	90.0	79.2	90.0
12'-0"	2'-3"	90.0	90.0	90.0	90.0	70.4	90.0
	2'-6"	90.0	90.0	90.0	90.0	63.3	90.0
	2'-9"	90.0	90.0	90.0	90.0	57.6	90.0
	3'-3"	90.0	90.0	90.0	88.6	48.7	90.0
	1'-9"	90.0	90.0	90.0	90.0	86.9	90.0
	2'-0"	90.0	90.0	90.0	90.0	76.0	90.0
12'-6"	2'-3"	90.0	90.0	90.0	90.0	67.6	90.0
	2'-6"	90.0	90.0	90.0	90.0	60.8	90.0
	2'-9"	90.0	90.0	90.0	90.0	55.3	90.0
	3'-3"	90.0	90.0	90.0	85.1	46.8	90.0

OPTION #2 : 3 FASTENERS CONNECTION

MAXIMUM MULLION SPAN	EFFECTIVE SPACING b = S_s/2 *	MAXIMUM A.S.D. DESIGN PRESSURE RATING (psf)					
		POURED CONCRETE (Min. f'c = 3ksi) SUBSTRATE			GROUT FILLED CONCRETE BLOCK SUBSTRATE		1/4" Min. THK ASTM A-36 STEEL SUBSTRATE
		FASTENER TYPES			FASTENER TYPES		FASTENER
"L" (Ft-in)	"b" (Ft-in)	K	L	M	N	O	P
	1'-9"	90.0	90.0	90.0	90.0	90.0	90.0
	2'-0"	90.0	90.0	90.0	90.0	90.0	90.0
8'-5"	2'-3"	90.0	90.0	90.0	90.0	90.0	90.0
	2'-6"	90.0	90.0	90.0	90.0	90.0	90.0
	2'-9"	90.0	90.0	90.0	90.0	90.0	90.0
	3'-3"	90.0	90.0	90.0	90.0	90.0	90.0
	1'-9"	90.0	90.0	90.0	90.0	90.0	90.0
	2'-0"	90.0	90.0	90.0	90.0	90.0	90.0
8'-6"	2'-3"	90.0	90.0	90.0	90.0	90.0	90.0
	2'-6"	90.0	90.0	90.0	90.0	90.0	90.0
	2'-9"	90.0	90.0	90.0	90.0	90.0	90.0
	3'-3"	90.0	90.0	90.0	90.0	90.0	90.0
	1'-9"	90.0	90.0	90.0	90.0	90.0	90.0
	2'-0"	90.0	90.0	90.0	90.0	90.0	90.0
9'-0"	2'-3"	90.0	90.0	90.0	90.0	90.0	90.0
	2'-6"	90.0	90.0	90.0	90.0	90.0	90.0
	2'-9"	90.0	90.0	90.0	90.0	90.0	90.0
	3'-3"	90.0	90.0	90.0	90.0	90.0	90.0
	1'-9"	90.0	90.0	90.0	90.0	90.0	90.0
	2'-0"	90.0	90.0	90.0	90.0	90.0	90.0
9'-6"	2'-3"	90.0	90.0	90.0	90.0	90.0	90.0
	2'-6"	90.0	90.0	90.0	90.0	90.0	90.0
	2'-9"	90.0	90.0	90.0	90.0	90.0	90.0
	3'-3"	90.0	90.0	90.0	90.0	90.0	90.0
	1'-9"	90.0	90.0	90.0	90.0	90.0	90.0
	2'-0"	90.0	90.0	90.0	90.0	90.0	90.0
10'-0"	2'-3"	90.0	90.0	90.0	90.0	90.0	90.0
	2'-6"	90.0	90.0	90.0	90.0	90.0	90.0
	2'-9"	90.0	90.0	90.0	90.0	90.0	90.0
	3'-3"	90.0	90.0	90.0	90.0	87.7	90.0
	1'-9"	90.0	90.0	90.0	90.0	90.0	90.0
	2'-0"	90.0	90.0	90.0	90.0	90.0	90.0
10'-6"	2'-3"	90.0	90.0	90.0	90.0	90.0	90.0
	2'-6"	90.0	90.0	90.0	90.0	90.0	90.0
	2'-9"	90.0	90.0	90.0	90.0	90.0	90.0
	3'-3"	90.0	90.0	90.0	90.0	83.5	90.0
	1'-9"	90.0	90.0	90.0	90.0	90.0	90.0
	2'-0"	90.0	90.0	90.0	90.0	90.0	90.0
11'-0"	2'-3"	90.0	90.0	90.0	90.0	90.0	90.0
	2'-6"	90.0	90.0	90.0	90.0	90.0	90.0
	2'-9"	90.0	90.0	90.0	90.0	90.0	90.0
	3'-3"	90.0	90.0	90.0	90.0	79.7	90.0
	1'-9"	90.0	90.0	90.0	90.0	90.0	90.0
	2'-0"	90.0	90.0	90.0	90.0	90.0	90.0
11'-6"	2'-3"	90.0	90.0	90.0	90.0	90.0	90.0
	2'-6"	90.0	90.0	90.0	90.0	90.0	90.0
	2'-9"	90.0	90.0	90.0	90.0	90.0	90.0
	3'-3"	90.0	90.0	90.0	90.0	76.3	90.0
	1'-9"	90.0	90.0	90.0	90.0	90.0	90.0
	2'-0"	90.0	90.0	90.0	90.0	90.0	90.0
12'-0"	2'-3"	90.0	90.0	90.0	90.0	90.0	90.0
	2'-6"	90.0	90.0	90.0	90.0	90.0	90.0
	2'-9"	90.0	90.0	90.0	90.0	86.4	90.0
	3'-3"	90.0	90.0	90.0	90.0	73.1	90.0
	1'-9"	90.0	90.0	90.0	90.0	90.0	90.0
	2'-0"	90.0	90.0	90.0	90.0	90.0	90.0
12'-6"	2'-3"	90.0	90.0	90.0	90.0	90.0	90.0
	2'-6"	90.0	90.0	90.0	90.0	90.0	90.0
	2'-9"	90.0	90.0	90.0	90.0	82.9	90.0
	3'-3"	90.0	90.0	90.0	90.0	70.2	90.0

OPTION #3 : 4 FASTENERS CONNECTION

MAXIMUM MULLION SPAN	EFFECTIVE SPACING b = S_s/2 *	MAXIMUM A.S.D. DESIGN PRESSURE RATING (psf)					
		POURED CONCRETE (Min. f'c = 3ksi) SUBSTRATE			GROUT FILLED CONCRETE BLOCK SUBSTRATE		1/4" Min. THK ASTM A-36 STEEL SUBSTRATE
		FASTENER TYPES			FASTENER TYPES		FASTENER
"L" (Ft-in)	"b" (Ft-in)	K	L	M	N	O	P
	1'-9"	90.0	90.0	90.0	90.0	90.0	90.0
	2'-0"	90.0	90.0	90.0	90.0	90.0	90.0
8'-5"	2'-3"	90.0	90.0	90.0	90.0	90.0	90.0
	2'-6"	90.0	90.0	90.0	90.0	90.0	90.0
	2'-9"	90.0	90.0	90.0	90.0	90.0	90.0
	3'-3"	90.0	90.0	90.0	90.0	90.0	90.0
	1'-9"	90.0	90.0	90.0	90.0	90.0	90.0
	2'-0"	90.0	90.0	90.0	90.0	90.0	90.0
8'-6"	2'-3"	90.0	90.0	90.0	90.0	90.0	90.0
	2'-6"	90.0	90.0	90.0	90.0	90.0	90.0
	2'-9"	90.0	90.0	90.0	90.0	90.0	90.0
	3'-3"	90.0	90.0	90.0	90.0	90.0	90.0
	1'-9"	90.0	90.0	90.0	90.0	90.0	90.0
	2'-0"	90.0	90.0	90.0	90.0	90.0	90.0
9'-0"	2'-3"	90.0	90.0	90.0	90.0	90.0	90.0
	2'-6"	90.0	90.0	90.0	90.0	90.0	90.0
	2'-9"	90.0	90.0	90.0	90.0	90.0	90.0
	3'-3"	90.0	90.0	90.0	90.0	90.0	90.0
	1'-9"	90.0	90.0	90.0	90.0	90.0	90.0
	2'-0"	90.0	90.0	90.0	90.0	90.0	90.0
9'-6"	2'-3"	90.0	90.0	90.0	90.0	90.0	90.0
	2'-6"	90.0	90.0	90.0	90.0	90.0	90.0
	2'-9"	90.0	90.0	90.0	90.0	90.0	90.0
	3'-3"	90.0	90.0	90.0	90.0	90.0	90.0
	1'-9"	90.0	90.0	90.0	90.0	90.0	90.0
	2'-0"	90.0	90.0	90.0	90.0	90.0	90.0
10'-0"	2'-3"	90.0	90.0	90.0	90.0	90.0	90.0
	2'-6"	90.0	90.0	90.0	90.0	90.0	90.0
	2'-9"	90.0	90.0	90.0	90.0	90.0	90.0
	3'-3"	90.0	90.0	90.0	90.0	90.0	90.0
	1'-9"	90.0	90.0	90.0	90.0	90.0	90.0
	2'-0"	90.0	90.0	90.0	90.0	90.0	90.0
10'-6"	2'-3"	90.0	90.0	90.0	90.0	90.0	90.0
	2'-6"	90.0	90.0	90.0	90.0	90.0	90.0
	2'-9"	90.0	90.0	90.0	90.0	90.0	90.0
	3'-3"	90.0	90.0	90.0	90.0	90.0	90.0
	1'-9"	90.0	90.0	90.0	90.0	90.0	90.0
	2'-0"	90.0	90.0	90.0	90.0	90.0	90.0
11'-0"	2'-3"	90.0	90.0	90.0	90.0	90.0	90.0
	2'-6"	90.0	90.0	90.0	90.0	90.0	90.0
	2'-9"	90.0	90.0	90.0	90.0	90.0	90.0
	3'-3"	90.0	90.0	90.0	90.0	90.0	90.0
	1'-9"	90.0	90.0	90.0	90.0	90.0	90.0
	2'-0"	90.0	90.0	90.0	90.0	90.0	90.0
11'-6"	2'-3"	90.0	90.0	90.0	90.0	90.0	90.0
	2'-6"	90.0	90.0	90.0	90.0	90.0	90.0
	2'-9"	90.0	90.0	90.0	90.0	90.0	90.0
	3'-3"	90.0	90.0	90.0	90.0	90.0	90.0
	1'-9"	90.0	90.0	90.0	90.0	90.0	90.0
	2'-0"	90.0	90.0	90.0	90.0	90.0	90.0
12'-0"	2'-3"	90.0	90.0	90.0	90.0	90.0	90.0
	2'-6"	90.0	90.0	90.0	90.0	90.0	90.0
	2'-9"	90.0	90.0	90.0	90.0	90.0	90.0
	3'-3"	90.0	90.0	90.0	90.0	90.0	90.0
	1'-9"	90.0	90.0	90.0	90.0	90.0	90.0
	2'-0"	90.0	90.0	90.0	90.0	90.0	90.0
12'-6"	2'-3"	90.0	90.0	90.0	90.0	90.0	90.0
	2'-6"	90.0	90.0	90.0	90.0	90.0	90.0
	2'-9"	90.0	90.0	90.0	90.0	90.0	90.0
	3'-3"	90.0	90.0	90.0	90.0	90.0	90.0

OPTION # 1 (ELEVATION)
(2) FASTENERS CONNECTION

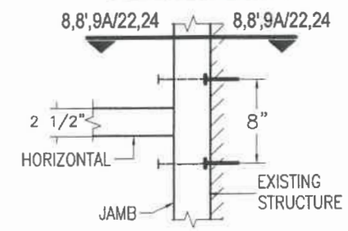

OPTION # 2 (ELEVATION)
(3) FASTENERS CONNECTION

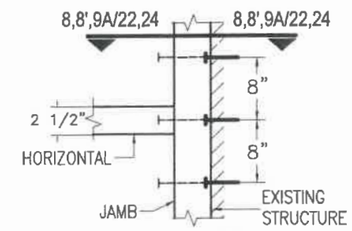

OPTION # 3 (ELEVATION)
(4) FASTENERS CONNECTION

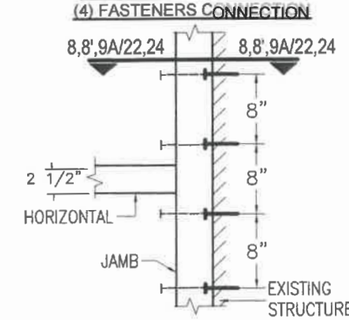

(B) FASTENER TYPES REQUIREMENTS:

K - 1/2"Ø HILTI KWIK BOLT TZ ANCHOR W/ 2" Min. EMBEDMENT INTO POURED CONCRETE (Min. f'c = 3 ksi) BEYOND ANY FINISH MATERIAL, W/ 4" MIN. EDGE DISTANCE.

L - 1/2"Ø HILTI KWIK BOLT 3 ANCHOR W/ 3 1/2" Min. EMBEDMENT INTO POURED CONCRETE (Min. f'c = 3 ksi) BEYOND ANY FINISH MATERIAL, W/ 4" MIN. EDGE DISTANCE.

M - 1/2"Ø HILTI HUS-H SCREW ANCHOR W/ 3" Min. EMBEDMENT INTO POURED CONCRETE (Min. f'c = 3 ksi) BEYOND ANY FINISH MATERIAL, W/ 4" MIN. EDGE DISTANCE.

N - 1/2"Ø HILTI KWIK BOLT 3 ANCHOR W/ 3 1/2" Min. EMBEDMENT INTO GROUT FILLED CONCRETE BLOCK BEYOND ANY FINISH MATERIAL, W/ 4" MIN. EDGE DISTANCE.

O - 1/2"Ø HILTI HUS-H SCREW ANCHOR W/ 3" Min. EMBEDMENT INTO GROUT FILLED CONCRETE BLOCK BEYOND ANY FINISH MATERIAL, W/ 4" MIN. EDGE DISTANCE.

P - 1/2"Ø-13 TYPE "F" GRADE 5 BOLT TO 1/4" MIN. THK. ASTM A-36 STEEL W/ 1" MIN. EDGE DISTANCE OR 1/2"Ø-13 SAE GRADE 5, GALVANIZED STEEL BOLT W/ LOCK WASHER & NUT TO 1/4" MIN. THK. ASTM A-36 STEEL & MIN. E.D. = 1".

* SEE SHEET 9 FOR EFFECTIVE SPACING DEFINITION AT ISOMETRIC.

FLORIDA BUILDING CODE (High & Non High Velocity Hurricane Zone)

©2021 TILTECO, INC

TILTECO INC.
TILLIT TESTING & ENGINEERING COMPANY
6355 N.W. 36th. St., Ste. 305, VIRGINIA GARDENS, FLORIDA 33166
Phone : (305)871-1530 . Fax : (305)871-1531
e-mail: tilteco@aol.com
CA-0006719
WALTER A. TILLIT Jr., P.E.
FLORIDA Lic. # 44167

WALTER A. TILLIT JR. LICENSE No. 44167 STATE OF FLORIDA PROFESSIONAL ENGINEER

P.E. SEAL/SIGNATURE/DATE

HR-251 CAPTURED CURTAIN WALL SYSTEM
LARGE & SMALL MISSILE IMPACT INSULATED GLASS

Oldcastle BuildingEnvelope™
803 Airport Rd - Terrell, TX 75160
www.OldcastleBE.com - Phone 800-869-4567

REV. No	DESCRIPTION	DATE	REV. No	DESCRIPTION	DATE
1	OLD 18-032	04/15/21	3		
2			4		

M.P DRAWN BY

04/15/2021 DATE

21-058 DRAWING No

SHEET 16A OF 36

MAXIMUM A.S.D. DESIGN PRESSURE RATING FOR JAMBS AT TWIN SPAN CURTAIN WALL FASTENED TO EXISTING STRUCTURE W/ 1/2"Ø FASTENERS (CONTINUED): LARGE & SMALL MISSILE INSTALLATION

OPTION #1 : 2 FASTENERS CONNECTION

MAXIMUM MULLION SPAN	EFFECTIVE SPACING b = S_5 /2 *	MAXIMUM A.S.D. DESIGN PRESSURE RATING (psf)					
		POURED CONCRETE (Min. f'c = 3ksi) SUBSTRATE			GROUT FILLED CONCRETE BLOCK SUBSTRATE		1/4" Min. THK ASTM A-36 STEEL SUBSTRATE
		FASTENER TYPES			FASTENER TYPES		FASTENER
"L" (ft-in)	"b" (ft-in)	K	L	M	N	O	P
	1'-9"	90.0	90.0	90.0	73.2	47.5	90.0
	2'-0"	90.0	90.0	90.0	64.1	41.5	90.0
8'-5"	2'-3"	90.0	90.0	89.2	57.0	36.9	90.0
	2'-6"	90.0	90.0	80.3	51.3	33.2	90.0
	2'-9"	90.0	90.0	73.0	46.6	30.2	87.7
	1'-9"	90.0	90.0	90.0	73.1	47.4	90.0
	2'-0"	90.0	90.0	90.0	63.9	41.4	90.0
8'-6"	2'-3"	90.0	90.0	89.0	56.8	36.8	90.0
	2'-6"	90.0	90.0	80.1	51.1	33.1	90.0
	2'-9"	90.0	90.0	72.8	46.5	30.1	87.5
	1'-9"	90.0	90.0	90.0	71.6	46.4	90.0
	2'-0"	90.0	90.0	90.0	62.6	40.6	90.0
9'-0"	2'-3"	90.0	90.0	87.2	55.7	36.1	90.0
	2'-6"	90.0	90.0	78.5	50.1	32.5	90.0
	2'-9"	90.0	90.0	71.4	45.6	29.5	85.7
	1'-9"	90.0	90.0	90.0	69.7	45.2	90.0
	2'-0"	90.0	90.0	90.0	61.0	39.5	90.0
9'-6"	2'-3"	90.0	90.0	84.9	54.2	35.1	90.0
	2'-6"	90.0	90.0	76.4	48.8	31.6	90.0
	2'-9"	90.0	90.0	69.5	44.4	28.8	83.4
	1'-9"	90.0	90.0	90.0	67.6	43.8	90.0
	2'-0"	90.0	90.0	90.0	59.2	38.3	90.0
10'-0"	2'-3"	90.0	90.0	82.4	52.6	34.1	90.0
	2'-6"	90.0	90.0	74.2	47.3	30.7	89.0
	2'-9"	90.0	90.0	67.4	43.0	27.9	80.9
	1'-9"	90.0	90.0	90.0	65.4	42.4	90.0
	2'-0"	90.0	90.0	89.7	57.3	37.1	90.0
10'-6"	2'-3"	90.0	90.0	79.7	50.9	33.0	90.0
	2'-6"	90.0	90.0	71.8	45.8	29.7	86.2
	2'-9"	90.0	90.0	65.2	41.6	27.0	78.3
	1'-9"	90.0	90.0	90.0	63.3	41.0	90.0
	2'-0"	90.0	90.0	86.7	55.4	35.9	90.0
11'-0"	2'-3"	90.0	90.0	77.1	49.2	31.9	90.0
	2'-6"	90.0	90.0	69.4	44.3	28.7	83.3
	2'-9"	90.0	90.0	63.1	40.3	26.1	75.7
	1'-9"	90.0	90.0	90.0	61.2	39.6	90.0
	2'-0"	90.0	90.0	83.8	53.5	34.7	90.0
11'-6"	2'-3"	90.0	90.0	74.5	47.6	30.8	89.5
	2'-6"	90.0	90.0	67.1	42.8	27.7	80.5
	2'-9"	89.6	89.6	61.0	38.9	25.2	73.2
	1'-9"	90.0	90.0	90.0	59.1	38.3	90.0
	2'-0"	90.0	90.0	81.0	51.7	33.5	90.0
12'-0"	2'-3"	90.0	90.0	72.0	46.0	29.8	86.5
	2'-6"	90.0	90.0	64.8	41.4	26.8	77.8
	2'-9"	86.6	86.6	58.9	37.6	24.4	70.7
	1'-9"	90.0	90.0	89.5	57.1	37.0	90.0
	2'-0"	90.0	90.0	78.3	50.0	32.4	90.0
12'-6"	2'-3"	90.0	90.0	69.6	44.4	28.8	83.6
	2'-6"	90.0	90.0	62.6	40.0	25.9	75.2
	2'-9"	83.7	83.7	57.0	36.4	23.6	68.4

OPTION #2: 3 FASTENERS CONNECTION

MAXIMUM MULLION SPAN	EFFECTIVE SPACING b = S_5 /2 *	MAXIMUM A.S.D. DESIGN PRESSURE RATING (psf)					
		POURED CONCRETE (Min. f'c = 3ksi) SUBSTRATE			GROUT FILLED CONCRETE BLOCK SUBSTRATE		1/4" Min. THK ASTM A-36 STEEL SUBSTRATE
		FASTENER TYPES			FASTENER TYPES		FASTENER
"L" (ft-in)	"b" (ft-in)	K	L	M	N	O	P
	1'-9"	90.0	90.0	90.0	90.0	71.2	90.0
	2'-0"	90.0	90.0	90.0	90.0	62.3	90.0
8'-5"	2'-3"	90.0	90.0	90.0	85.4	55.4	90.0
	2'-6"	90.0	90.0	90.0	76.9	49.8	90.0
	2'-9"	90.0	90.0	90.0	69.9	45.3	90.0
	1'-9"	90.0	90.0	90.0	90.0	71.0	90.0
	2'-0"	90.0	90.0	90.0	90.0	62.1	90.0
8'-6"	2'-3"	90.0	90.0	90.0	85.2	55.2	90.0
	2'-6"	90.0	90.0	90.0	76.7	49.7	90.0
	2'-9"	90.0	90.0	90.0	69.6	45.2	90.0
	1'-9"	90.0	90.0	90.0	90.0	69.6	90.0
	2'-0"	90.0	90.0	90.0	90.0	60.9	90.0
9'-0"	2'-3"	90.0	90.0	90.0	83.5	54.1	90.0
	2'-6"	90.0	90.0	90.0	75.2	48.7	90.0
	2'-9"	90.0	90.0	90.0	68.3	44.3	90.0
	1'-9"	90.0	90.0	90.0	90.0	67.8	90.0
	2'-0"	90.0	90.0	90.0	90.0	59.3	90.0
9'-6"	2'-3"	90.0	90.0	90.0	81.3	52.7	90.0
	2'-6"	90.0	90.0	90.0	73.2	47.4	90.0
	2'-9"	90.0	90.0	90.0	66.5	43.1	90.0
	1'-9"	90.0	90.0	90.0	90.0	65.7	90.0
	2'-0"	90.0	90.0	90.0	88.8	57.5	90.0
10'-0"	2'-3"	90.0	90.0	90.0	78.9	51.1	90.0
	2'-6"	90.0	90.0	90.0	71.0	46.0	90.0
	2'-9"	90.0	90.0	90.0	64.5	41.8	90.0
	1'-9"	90.0	90.0	90.0	90.0	63.6	90.0
	2'-0"	90.0	90.0	90.0	85.9	55.7	90.0
10'-6"	2'-3"	90.0	90.0	90.0	76.4	49.5	90.0
	2'-6"	90.0	90.0	90.0	68.7	44.5	90.0
	2'-9"	90.0	90.0	90.0	62.5	40.5	90.0
	1'-9"	90.0	90.0	90.0	90.0	61.5	90.0
	2'-0"	90.0	90.0	90.0	83.1	53.8	90.0
11'-0"	2'-3"	90.0	90.0	90.0	73.8	47.9	90.0
	2'-6"	90.0	90.0	90.0	66.4	43.1	90.0
	2'-9"	90.0	90.0	90.0	60.4	39.2	90.0
	1'-9"	90.0	90.0	90.0	90.0	59.5	90.0
	2'-0"	90.0	90.0	90.0	80.3	52.0	90.0
11'-6"	2'-3"	90.0	90.0	90.0	71.3	46.2	90.0
	2'-6"	90.0	90.0	90.0	64.2	41.6	90.0
	2'-9"	90.0	90.0	90.0	58.4	37.8	90.0
	1'-9"	90.0	90.0	90.0	88.7	57.5	90.0
	2'-0"	90.0	90.0	90.0	77.6	50.3	90.0
12'-0"	2'-3"	90.0	90.0	90.0	69.0	44.7	90.0
	2'-6"	90.0	90.0	90.0	62.1	40.2	90.0
	2'-9"	90.0	90.0	88.4	56.4	36.6	90.0
	1'-9"	90.0	90.0	90.0	85.7	55.5	90.0
	2'-0"	90.0	90.0	90.0	75.0	48.6	90.0
12'-6"	2'-3"	90.0	90.0	90.0	66.7	43.2	90.0
	2'-6"	90.0	90.0	90.0	60.0	38.9	90.0
	2'-9"	90.0	90.0	85.4	54.5	35.3	90.0

OPTION #3 : 4 FASTENERS CONNECTION

MAXIMUM MULLION SPAN	EFFECTIVE SPACING b = S_5 /2 *	MAXIMUM A.S.D. DESIGN PRESSURE RATING (psf)					
		POURED CONCRETE (Min. f'c = 3ksi) SUBSTRATE			GROUT FILLED CONCRETE BLOCK SUBSTRATE		1/4" Min. THK ASTM A-36 STEEL SUBSTRATE
		FASTENER TYPES			FASTENER TYPES		FASTENER
"L" (ft-in)	"b" (ft-in)	K	L	M	N	O	P
	1'-9"	90.0	90.0	90.0	90.0	90.0	90.0
	2'-0"	90.0	90.0	90.0	90.0	83.1	90.0
8'-5"	2'-3"	90.0	90.0	90.0	90.0	73.8	90.0
	2'-6"	90.0	90.0	90.0	90.0	66.5	90.0
	2'-9"	90.0	90.0	90.0	90.0	60.4	90.0
	1'-9"	90.0	90.0	90.0	90.0	90.0	90.0
	2'-0"	90.0	90.0	90.0	90.0	82.9	90.0
8'-6"	2'-3"	90.0	90.0	90.0	90.0	73.7	90.0
	2'-6"	90.0	90.0	90.0	90.0	66.3	90.0
	2'-9"	90.0	90.0	90.0	90.0	60.3	90.0
	1'-9"	90.0	90.0	90.0	90.0	90.0	90.0
	2'-0"	90.0	90.0	90.0	90.0	81.2	90.0
9'-0"	2'-3"	90.0	90.0	90.0	90.0	72.2	90.0
	2'-6"	90.0	90.0	90.0	90.0	65.0	90.0
	2'-9"	90.0	90.0	90.0	90.0	59.1	90.0
	1'-9"	90.0	90.0	90.0	90.0	90.0	90.0
	2'-0"	90.0	90.0	90.0	90.0	79.1	90.0
9'-6"	2'-3"	90.0	90.0	90.0	90.0	70.3	90.0
	2'-6"	90.0	90.0	90.0	90.0	63.3	90.0
	2'-9"	90.0	90.0	90.0	88.7	57.5	90.0
	1'-9"	90.0	90.0	90.0	90.0	87.7	90.0
	2'-0"	90.0	90.0	90.0	90.0	76.7	90.0
10'-0"	2'-3"	90.0	90.0	90.0	90.0	68.2	90.0
	2'-6"	90.0	90.0	90.0	90.0	61.4	90.0
	2'-9"	90.0	90.0	90.0	86.1	55.8	90.0
	1'-9"	90.0	90.0	90.0	90.0	84.8	90.0
	2'-0"	90.0	90.0	90.0	90.0	74.2	90.0
10'-6"	2'-3"	90.0	90.0	90.0	90.0	66.0	90.0
	2'-6"	90.0	90.0	90.0	90.0	59.4	90.0
	2'-9"	90.0	90.0	90.0	83.3	54.0	90.0
	1'-9"	90.0	90.0	90.0	90.0	82.0	90.0
	2'-0"	90.0	90.0	90.0	90.0	71.8	90.0
11'-0"	2'-3"	90.0	90.0	90.0	90.0	63.8	90.0
	2'-6"	90.0	90.0	90.0	88.6	57.4	90.0
	2'-9"	90.0	90.0	90.0	80.5	52.2	90.0
	1'-9"	90.0	90.0	90.0	90.0	79.3	90.0
	2'-0"	90.0	90.0	90.0	90.0	69.4	90.0
11'-6"	2'-3"	90.0	90.0	90.0	90.0	61.7	90.0
	2'-6"	90.0	90.0	90.0	85.6	55.5	90.0
	2'-9"	90.0	90.0	90.0	77.8	50.4	90.0
	1'-9"	90.0	90.0	90.0	90.0	76.6	90.0
	2'-0"	90.0	90.0	90.0	90.0	67.0	90.0
12'-0"	2'-3"	90.0	90.0	90.0	90.0	59.6	90.0
	2'-6"	90.0	90.0	90.0	82.7	53.6	90.0
	2'-9"	90.0	90.0	90.0	75.2	48.8	90.0
	1'-9"	90.0	90.0	90.0	90.0	74.1	90.0
	2'-0"	90.0	90.0	90.0	90.0	64.8	90.0
12'-6"	2'-3"	90.0	90.0	90.0	88.9	57.6	90.0
	2'-6"	90.0	90.0	90.0	80.0	51.8	90.0
	2'-9"	90.0	90.0	90.0	72.7	47.1	90.0

* SEE SHEET 10 FOR EFFECTIVE SPACING DEFINITION AT ISOMETRIC.

OPTION # 1 (ELEVATION)
(2) FASTENERS CONNECTION

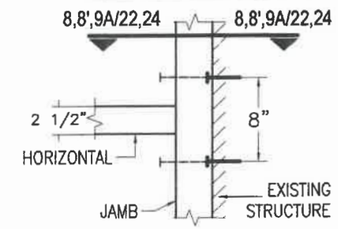

OPTION # 2 (ELEVATION)
(3) FASTENERS CONNECTION

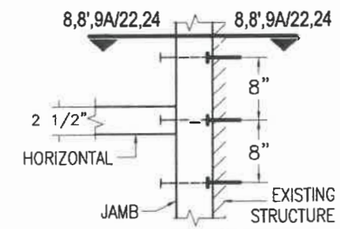

OPTION # 3 (ELEVATION)
(4) FASTENERS CONNECTION

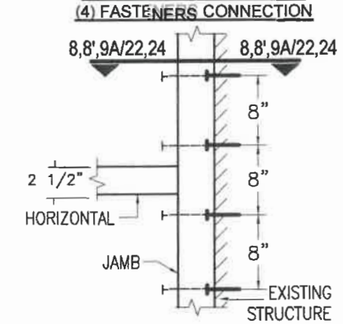

B FASTENER TYPES REQUIREMENTS:

K - 1/2"Ø HILTI KWIK BOLT TZ ANCHOR W/ 2" Min. EMBEDMENT INTO POURED CONCRETE (Min. f'c = 3 ksi) BEYOND ANY FINISH MATERIAL, W/ 4" MIN. EDGE DISTANCE.

L - 1/2"Ø HILTI KWIK BOLT 3 ANCHOR W/ 3 1/2" Min. EMBEDMENT INTO POURED CONCRETE (Min. f'c = 3 ksi) BEYOND ANY FINISH MATERIAL, W/ 4" MIN. EDGE DISTANCE.

M - 1/2"Ø HILTI HUS-H SCREW ANCHOR W/ 3" Min. EMBEDMENT INTO POURED CONCRETE (Min. f'c = 3 ksi) BEYOND ANY FINISH MATERIAL, W/ 4" MIN. EDGE DISTANCE.

N - 1/2"Ø HILTI KWIK BOLT 3 ANCHOR W/ 3 1/2" Min. EMBEDMENT INTO GROUT FILLED CONCRETE BLOCK BEYOND ANY FINISH MATERIAL, W/ 4". EDGE DISTANCE.

O - 1/2"Ø HILTI HUS-H SCREW ANCHOR W/ 3" Min. EMBEDMENT INTO GROUT FILLED CONCRETE BLOCK BEYOND ANY FINISH MATERIAL, W/ 4" MIN. EDGE DISTANCE.

P - 1/2"Ø-13 TYPE "F" GRADE 5 BOLT TO 1/4" MIN. THK. ASTM A-36 STEEL W/ 1" MIN. EDGE DISTANCE OR 1/2"Ø -13 SAE GALVANIZED STEEL GRADE 5 HHB THRU BOLT W/ NUT & LOCK WASHER TO 1/4" MIN. THK. ASTM A-36 STEEL W/ 1" MIN. EDGE DISTANCE.

FLORIDA BUILDING CODE (High & Non High Velocity Hurricane Zone)

©2021 TILTECO, INC

TILTECO INC.
TILLIT TESTING & ENGINEERING COMPANY
6355 N.W. 36th. St., Ste. 305, VIRGINIA GARDENS, FLORIDA 33166
Phone : (305)871-1530 . Fax : (305)871-1531
e-mail: tilteco@aol.com
CA-0006719
WALTER A. TILLIT Jr., P.E.
FLORIDA Lic. # 44167

HR-251 CAPTURED CURTAIN WALL SYSTEM
LARGE & SMALL MISSILE IMPACT INSULATED GLASS

Oldcastle BuildingEnvelope™
803 Airport Rd - Terrell, TX 75160
www.OldcastleBE.com - Phone 800-869-4567

REV. No	DESCRIPTION	DATE	REV. No	DESCRIPTION	DATE
1	OLD 16-032	04/15/21	3		
2			4		

M.P DRAWN BY
04/15/2021 DATE
21-058 DRAWING No
SHEET 17 OF 36

SEAL/SIGNATURE/DATE

WALTER A. TILLIT JR. LICENSE No. 44167 STATE OF FLORIDA PROFESSIONAL ENGINEER

HEAD CONNECTION DETAILS (SIDE VIEWS)

SINGLE SPAN

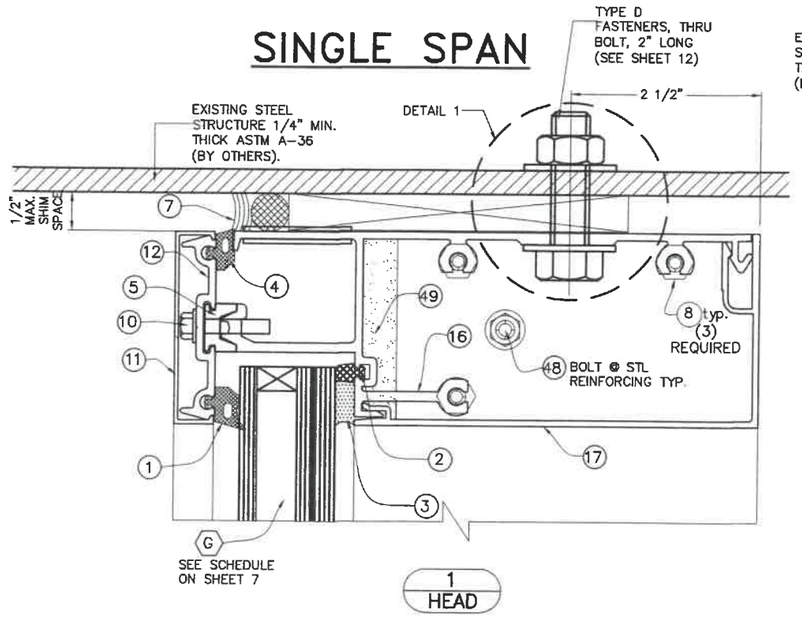

1
HEAD

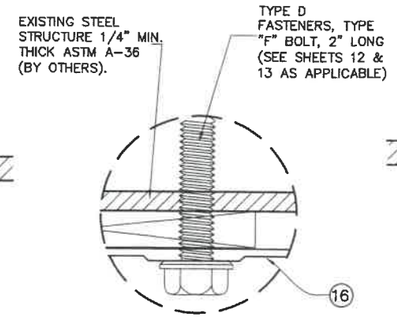

ALTERNATE FASTENER
DETAIL 1

TWIN SPAN

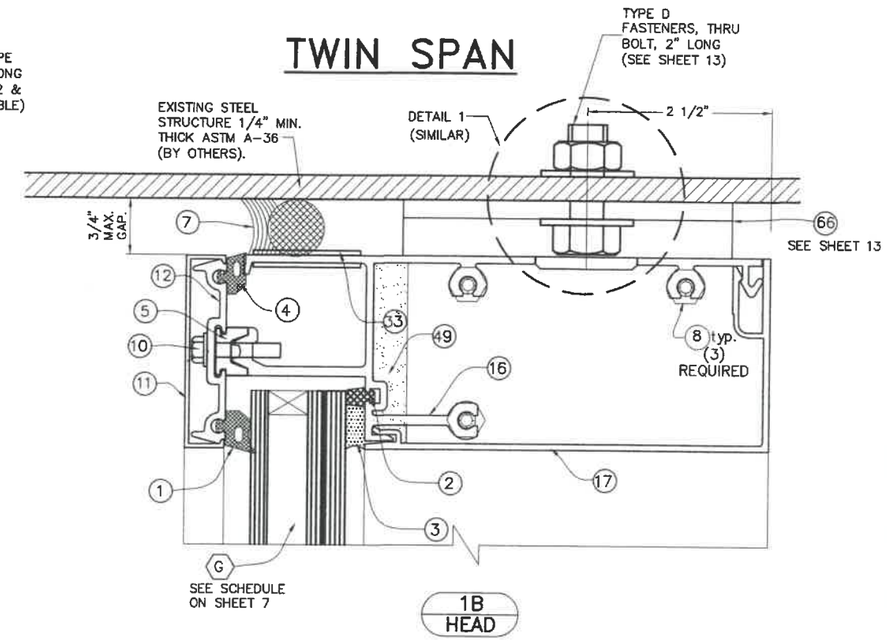

1B
HEAD

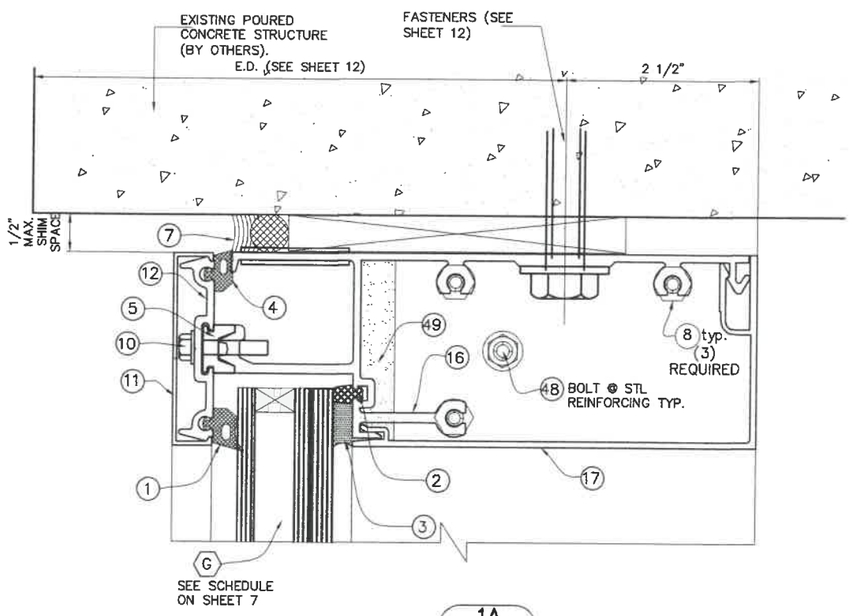

1A
HEAD

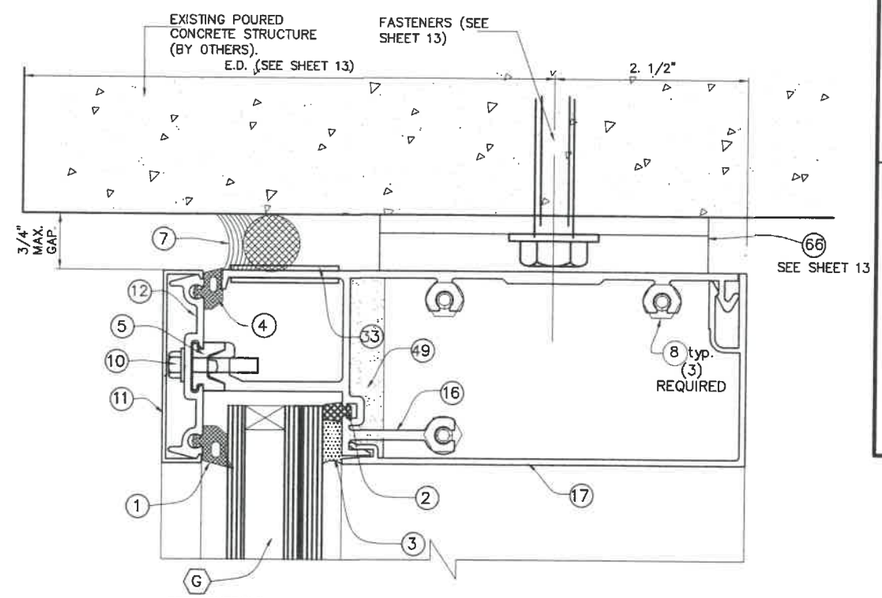

1C
HEAD

NOTE: SEE ALSO DETAILS 1, 2, 3 & 4, & 18 ON SHEETS 25 & 28 RESPECTIVELY

FLORIDA BUILDING CODE (High & Non High Velocity Hurricane Zone)

©2021 TILTECO, INC

TILTECO INC.
TILLIT TESTING & ENGINEERING COMPANY
6355 N.W. 36th. St., Ste. 305, VIRGINIA GARDENS, FLORIDA 33166
Phone : (305)871-1530 . Fax : (305)871-1531
e-mail: tilteco@aol.com
CA-0006719
WALTER A. TILLIT Jr., P.E.
FLORIDA Lic. # 44167

SEAL/SIGNATURE/DATE

WALTER A. TILLIT JR. LICENSE No. 44167 STATE OF FLORIDA PROFESSIONAL ENGINEER

HR-251 CAPTURED CURTAIN WALL SYSTEM
LARGE & SMALL MISSILE IMPACT INSULATED GLASS

Oldcastle BuildingEnvelope™
803 Airport Rd - Terrell, TX 75160
www.OldcastleBE.com - Phone 800-869-4567

REV. No	DESCRIPTION	DATE
1	OLD 18-032	04/15/21
2		
3		
4		

DESCRIPTION	DATE

M.P
DRAWN BY

04/15/2021
DATE

21-058
DRAWING No

SHEET 18 OF 36

HORIZONTAL CONNECTION DETAILS (SIDE VIEWS)

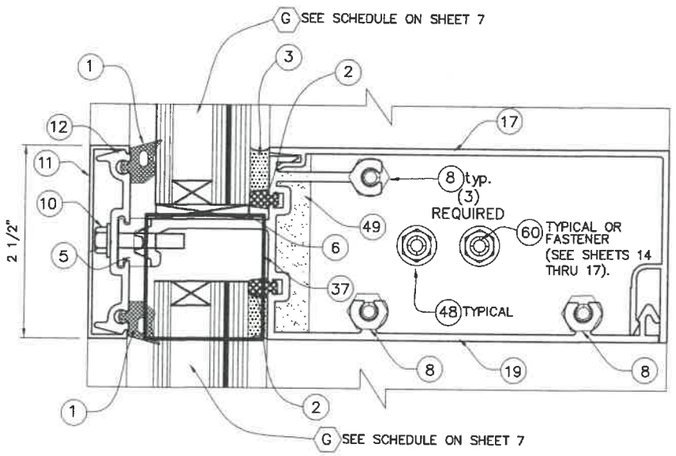

2
INT HORI

AT SINGLE OR TWIN SPAN

MAXIMUM A.S.D. DESIGN PRESSURE RATING FOR A GIVEN D.L.O., VALID FOR HORIZONTAL

D.L.O. (INCH)	MAX. A.S.D. DESIGN PRESSURE RATING (p.s.f.)	MISSILE TYPE
74.0 OR LESS	100.0	LARGE
74.0 OR LESS	90.0	SMALL

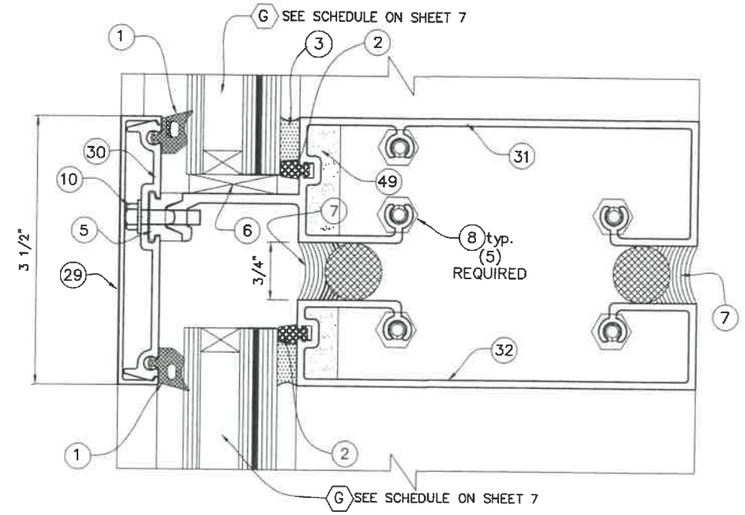

2A
INT HORI

AT TWIN SPAN ONLY (EXPANSION HORIZONTALS)

MAXIMUM A.S.D. DESIGN PRESSURE RATING FOR A GIVEN D.L.O., VALID FOR HORIZONTAL EXPANSION

D.L.O. (INCH)	MAX. A.S.D. DESIGN PRESSURE RATING (p.s.f.)
74.0	53.5
69.5	71.0
63.5 OR LESS	90.0

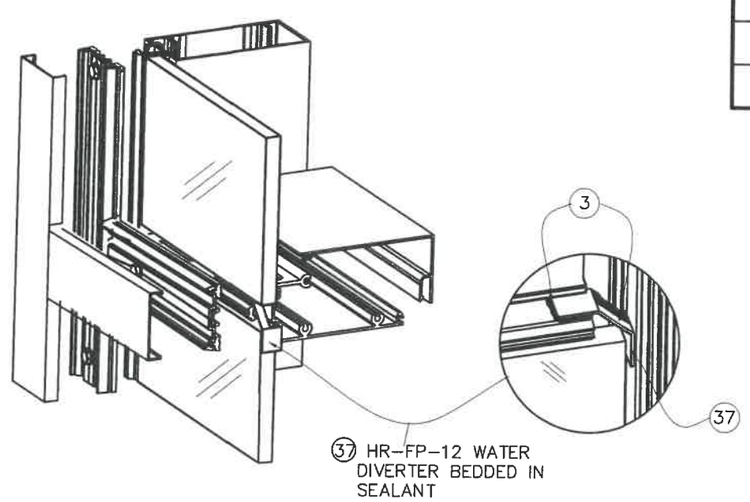

FLORIDA BUILDING CODE (High & Non High Velocity Hurricane Zone)

©2021 TILTECO, INC

TILTECO INC.
TILLIT TESTING & ENGINEERING COMPANY
6355 N.W. 36th. St., Ste. 305, VIRGINIA GARDENS, FLORIDA 33166
Phone : (305)871-1530 . Fax : (305)871-1531
e-mail: tilteco@aol.com
CA-0006719
WALTER A. TILLIT JR., P.E.
FLORIDA Lic. # 44167

HR-251 CAPTURED CURTAIN WALL SYSTEM
LARGE & SMALL MISSILE IMPACT INSULATED GLASS

Oldcastle BuildingEnvelope™
803 Airport Rd - Terrell, TX 75160
www.OldcastleBE.com - Phone 800-869-4567

REV. No	DESCRIPTION	DATE	REV. No	DESCRIPTION	DATE
1	OLD 18-032	04/19/21	3		
2			4		

M.P
DRAWN BY

04/15/2021
DATE

21-058
DRAWING No

SHEET 19 OF 36

WALTER A. TILLIT JR. LICENSE No. 44167 STATE OF FLORIDA PROFESSIONAL ENGINEER

P.E. SEAL/SIGNATURE/DATE

SILL CONNECTION DETAILS (SIDE VIEWS)

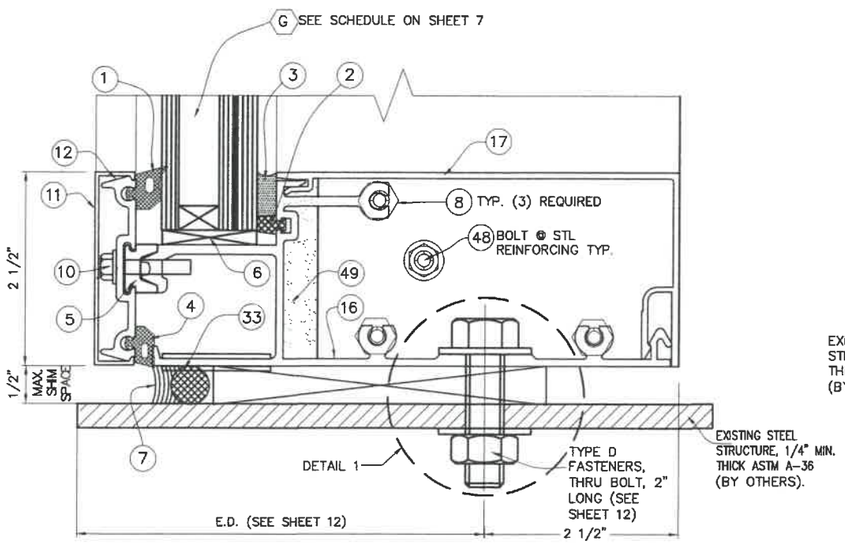

3
SILL

CONNECTION TO STEEL STRUCTURE

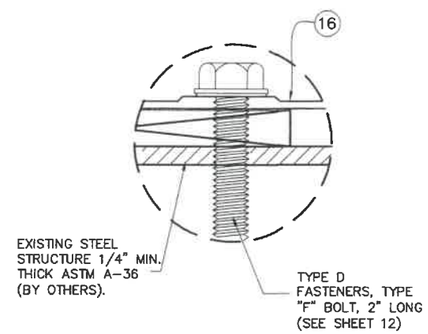

ALTERNATE FASTENER DETAIL 1

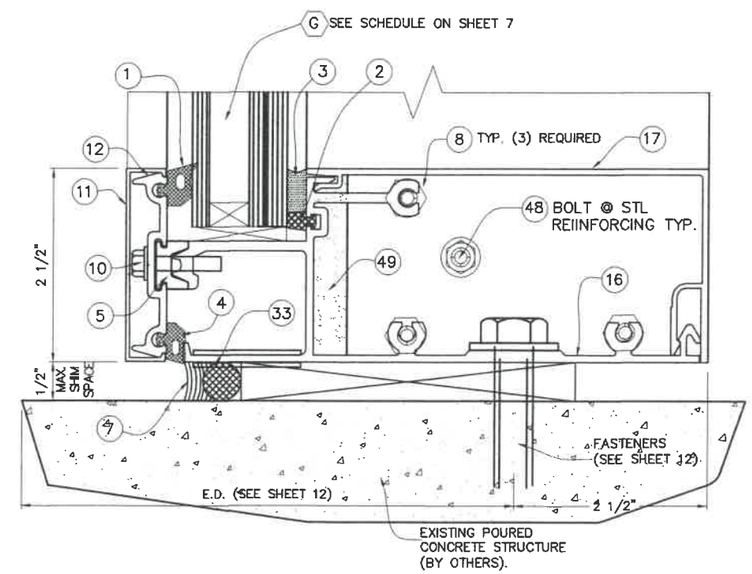

3
SILL

CONNECTION TO POURED CONCRETE STRUCTURE

NOTE: SEE ALSO DETAILS 1 THRU 4 ON SHEET 25

FLORIDA BUILDING CODE (High & Non High Velocity Hurricane Zone)

©2021 TILTECO, INC

TILTECO INC.
TILLIT TESTING & ENGINEERING COMPANY
6355 N.W. 36th. St., Ste. 305, VIRGINIA GARDENS, FLORIDA 33166
Phone : (305)871-1530 , Fax : (305)871-1531
e-mail: tilteco@aol.com
CA-0006719
WALTER A. TILLIT JR., P.E.
FLORIDA Lic. # 44167

WALTER A. TILLIT JR. LICENSE No. 44167 STATE OF FLORIDA PROFESSIONAL ENGINEER

P.E. SEAL/SIGNATURE/DATE

HR-251 CAPTURED CURTAIN WALL SYSTEM
LARGE & SMALL MISSILE IMPACT INSULATED GLASS

Oldcastle BuildingEnvelope™
803 Airport Rd - Terrell, TX 75160
www.OldcastleBE.com - Phone 800-869-4567

REV. No	DESCRIPTION	DATE	REV. No	DESCRIPTION	DATE
1	OLD 18-032	04/19/21	3		
2			4		

M.P
DRAWN BY

04/15/2021
DATE

21-058
DRAWING No

SHEET 20 OF 36

HORIZONTAL SECTION @ STANDARD MULLION DETAILS (PLAN)

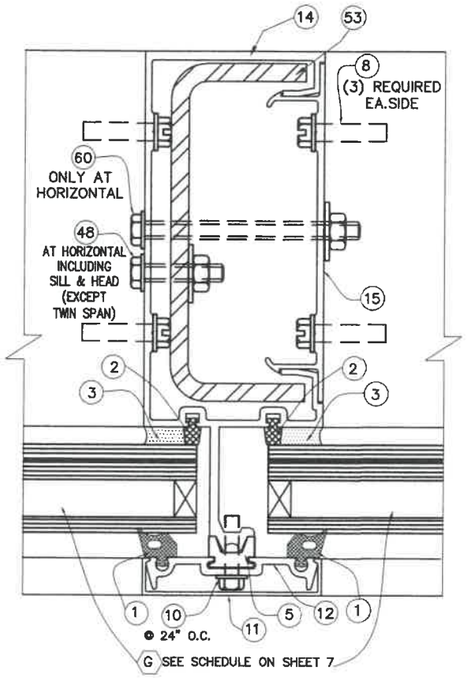

4
LIGHT MULLION W/STL

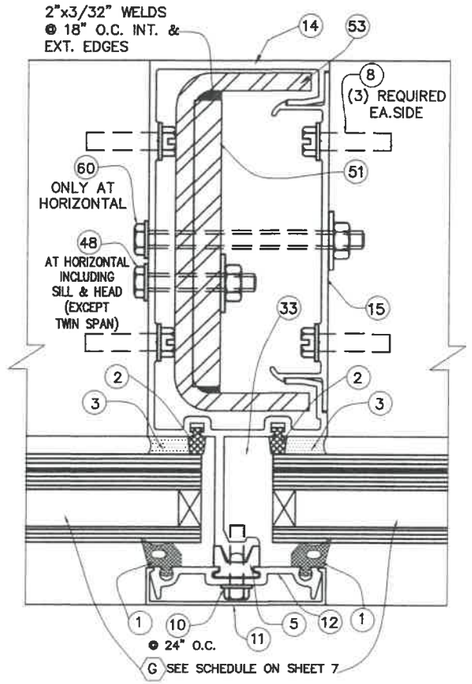

4A
LIGHT MULLION W/STL

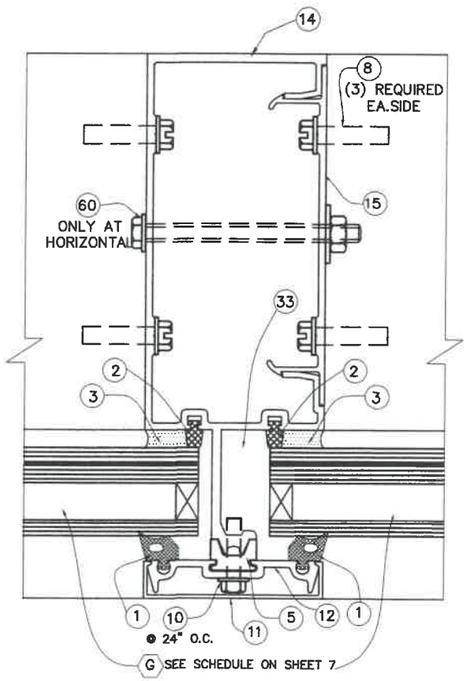

5
LIGHT MULLION W/O STL

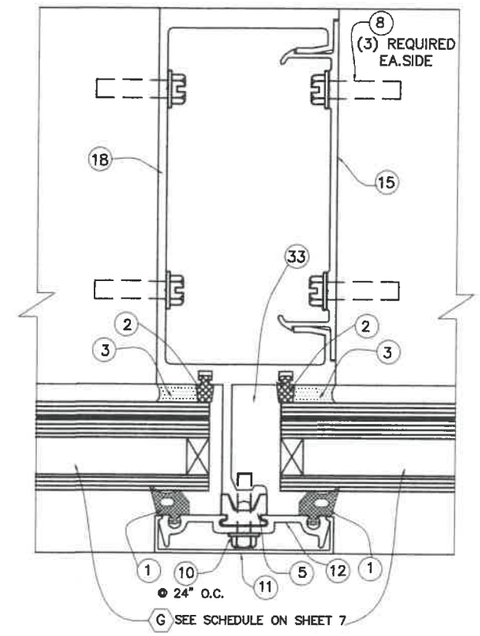

11
HEAVY MULLION

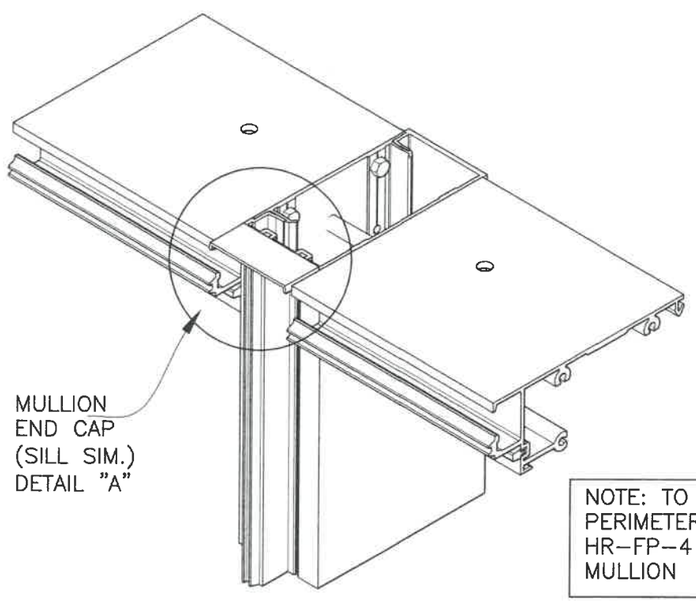

NOTE: TO ASSURE PROPER PERIMETER SEAL AT HEAD USE HR-FP-4 TO BRIDGE ACROSS MULLION

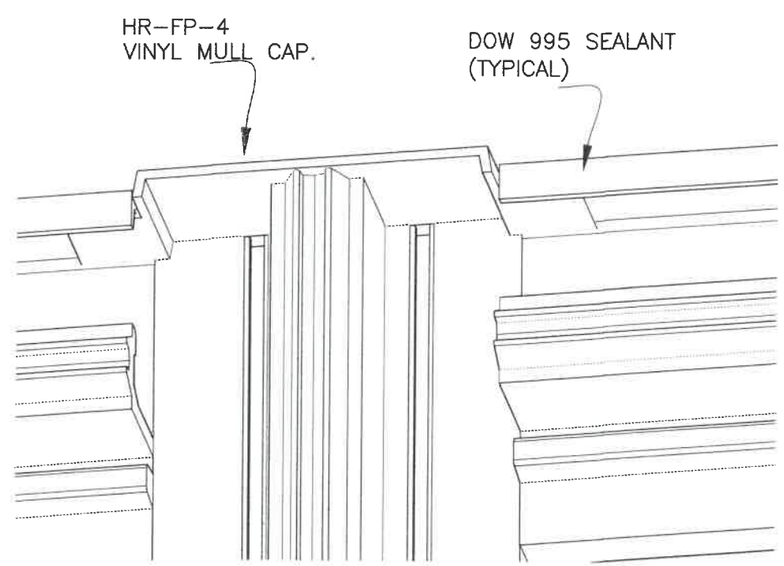

DETAIL "A"

FLORIDA BUILDING CODE (High & Non High Velocity Hurricane Zone)

M.P
DRAWN BY

04/15/2021
DATE

21-058
DRAWING No

SHEET 21 OF 36

HR-251 CAPTURED CURTAIN WALL SYSTEM
LARGE & SMALL MISSILE IMPACT INSULATED GLASS

Oldcastle BuildingEnvelope™
803 Airport Rd - Terrell, TX 75160
www.OldcastleBE.com - Phone 800-869-4567

REV. No	DESCRIPTION	DATE	REV. No	DESCRIPTION	DATE
1	OLD 18-032	04/15/21	3		
2			4		

©2021 TILTECO, INC

TILTECO INC.
TILLIT TESTING & ENGINEERING COMPANY
6355 N.W. 36th. St. Ste. 305, VIRGINIA GARDENS, FLORIDA 33166
Phone : (305)871-1530 . Fax : (305)871-1531
e-mail: tilteco@aol.com
CA-0006719
WALTER A. TILLIT Jr., P.E.
FLORIDA Lic. # 44167

WALTER A. TILLIT JR. LICENSE No. 44167 STATE OF FLORIDA PROFESSIONAL ENGINEER

4/16/2021

P.E. SEAL/SIGNATURE/DATE

JAMB CONNECTIONS AT HORIZONTALS (PLAN)

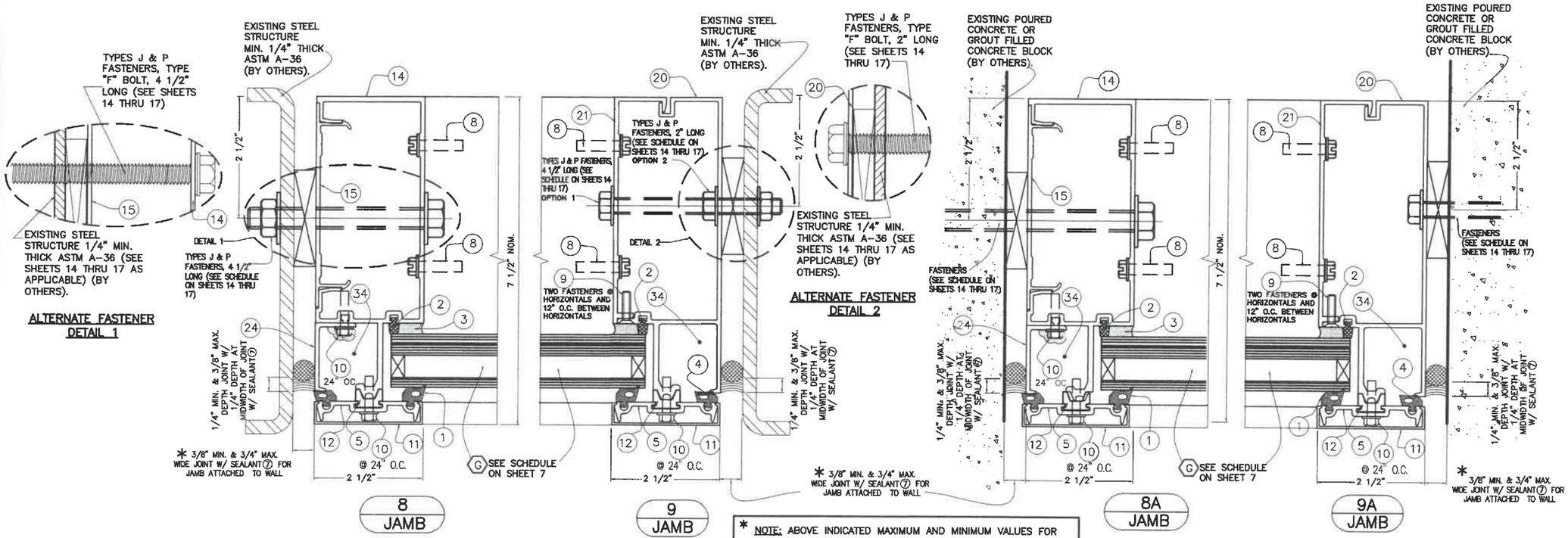

TO STEEL STRUCTURE

TO POURED CONCRETE OR GROUT FILLED CONCRETE BLOCK

* NOTE: ABOVE INDICATED MAXIMUM AND MINIMUM VALUES FOR SPECIFIED SEALANT VERTICAL JOINT WIDTH AT JAMBS CONNECTED TO WALL HAVE BEEN DETERMINED ONLY TAKING INTO CONSIDERATION THE ACTUAL MOVEMENT OF GLASS WALL AT JAMBS DUE TO THERMAL, WIND AND ITS OWN CONSTRUCTION TOLERANCE, AND NOT PERFORMANCE FACTORS FROM THE SURROUNDING STRUCTURE.

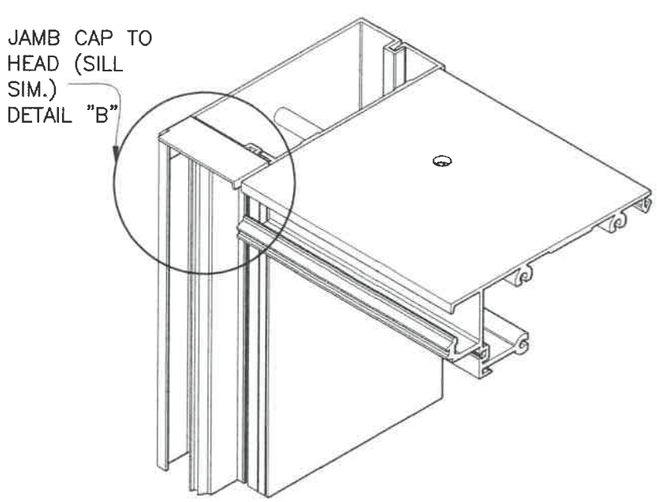

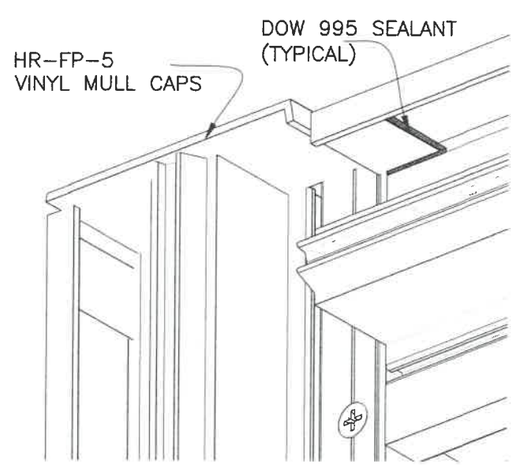

DETAIL "B"

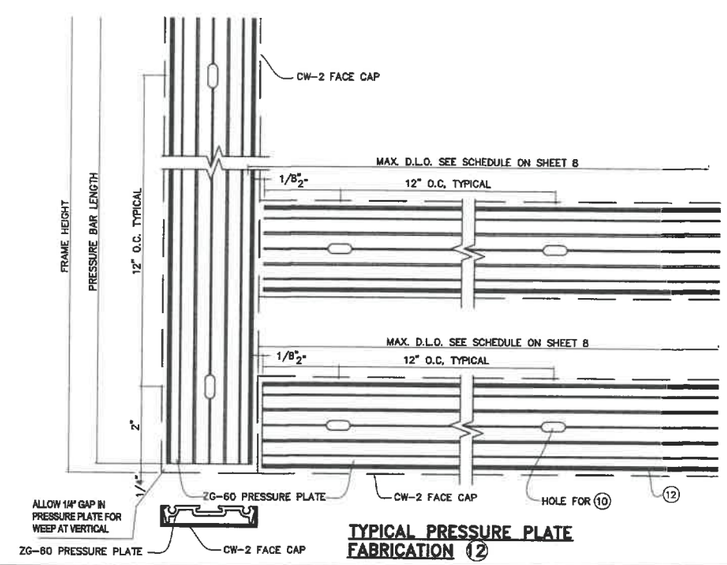

TYPICAL PRESSURE PLATE FABRICATION ⑫

FLORIDA BUILDING CODE (High & Non High Velocity Hurricane Zone)

HR-251 CAPTURED CURTAIN WALL SYSTEM
LARGE & SMALL MISSILE IMPACT INSULATED GLASS

M.P DRAWN BY

04/15/2021 DATE

21-058 DRAWING No

SHEET 22 OF 36

Oldcastle BuildingEnvelope™
803 Airport Rd - Terrell, TX 75160
www.OldcastleBE.com - Phone 800-869-4567

REV. No	DESCRIPTION	DATE	REV. No	DESCRIPTION	DATE
1	OLD 18-032	04/15/21	3		
2			4		

©2021 TILTECO, INC

TILTECO INC.
TILLIT TESTING & ENGINEERING COMPANY
6355 N.W. 36th. St., Ste. 305, VIRGINIA GARDENS, FLORIDA 33166
Phone : (305)871-1530 . Fax : (305)871-1531
e-mail: tilteco@aol.com
CA-0006719
WALTER A. TILLIT JR., P.E.
FLORIDA Lic. # 44167

WALTER A. TILLIT JR. LICENSED No. 44167 STATE OF FLORIDA PROFESSIONAL ENGINEER

SEAL/SIGNATURE/DATE

JAMB MULLIONS NOT ATTACHED TO EXISTING STRUCTURE FOR SINGLE SPAN ONLY (PLAN)

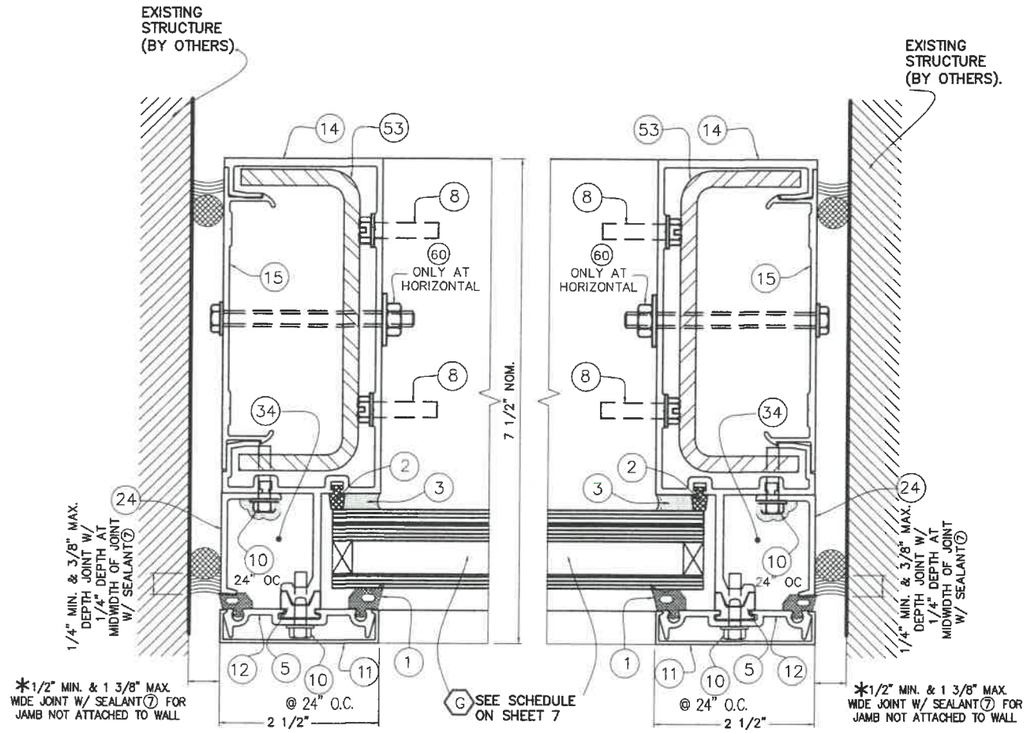

OPTION #1 OPTION #2

8B
JAMB

* NOTE: ABOVE INDICATED MAXIMUM AND MINIMUM VALUES FOR SPECIFIED SEALANT VERTICAL JOINT WIDTH AT JAMBS NOT CONNECTED TO WALL (FREE STANDING) HAVE BEEN DETERMINED ONLY TAKING INTO CONSIDERATION THE ACTUAL MOVEMENT OF GLASS WALL AT JAMBS DUE TO THERMAL, WIND AND ITS OWN CONSTRUCTION TOLERANCE, AND NOT PERFORMANCE FACTORS FROM THE SURROUNDING STRUCTURE.

HR-251 SINGLE SPAN JAMB MULLION W/O ANCHORAGE

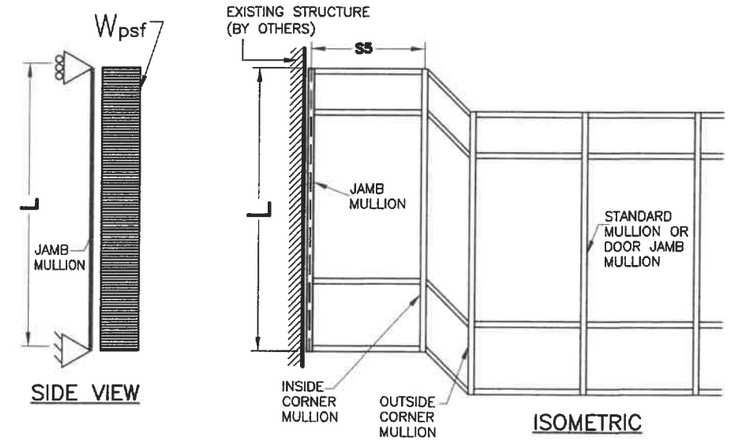

L = SINGLE SPAN JAMB MULLION; S5 = WIDTH OF JAMB MULLION GLASS PANEL

EFFECTIVE SPACING $b = \frac{S_5}{2}$ (SEE SCHEDULE)

MAXIMUM A.S.D. DESIGN PRESSURE RATING FOR SINGLE SPAN JAMB MULLIONS W/O ANCHORAGE TO STRUCTURE

MAXIMUM SINGLE SPAN JAMB MULLION "L"(ft) SCHEDULE
FOR A GIVEN A.S.D. DESIGN PRESSURE RATING (psf)
AND A GIVEN EFFECTIVE SPACING "b" (ft-in)

MAXIMUM A.S.D. DESIGN PRESSURE RATING (psf)	EFFECTIVE SPACING b = S5/2 "b" (ft-in)	JAMB W/O CONNECTION SPAN LF (ft-in)
76.0 or less	1'- 9"	12'- 6"
	2'- 0"	12'- 6"
	2'- 3"	12'- 6"
	2'- 6"	12'- 6"
	2'- 9"	12'- 6"
	3'- 0"	12'- 6"
	3'- 3"	12'- 6"
80.0	1'- 9"	12'- 6"
	2'- 0"	12'- 6"
	2'- 3"	12'- 6"
	2'- 6"	12'- 6"
	2'- 9"	12'- 6"
	3'- 0"	12'- 6"
	3'- 3"	12'- 3"
90.0	1'- 9"	12'- 6"
	2'- 0"	12'- 6"
	2'- 3"	12'- 6"
	2'- 6"	12'- 6"
	2'- 9"	12'- 6"
	3'- 0"	11'- 7"
	3'- 3"	10'- 11"
100.0*	1'- 9"	12'- 6"
	2'- 0"	12'- 6"
	2'- 3"	12'- 6"
	2'- 6"	12'- 6"
	2'- 9"	11'- 4"
	3'- 0"	10'- 5"
	3'- 3"	9'- 10"

* VALID ONLY FOR LARGE MISSILE ZONE INSTALLATION

FLORIDA BUILDING CODE (High & Non High Velocity Hurricane Zone)

M.P DRAWN BY

04/15/2021 DATE

21-058 DRAWING No

SHEET 22A OF 36

HR-251 CAPTURED CURTAIN WALL SYSTEM
LARGE & SMALL MISSILE IMPACT INSULATED GLASS

Oldcastle BuildingEnvelope™
803 Airport Rd - Terrell, TX 75160
www.OldcastleBE.com - Phone 800-869-4567

REV. No	DESCRIPTION	DATE	REV. No	DESCRIPTION	DATE
1	OLD 18-032	04/15/21	3		
2			4		

©2021 TILTECO, INC

TILTECO INC.
TILLIT TESTING & ENGINEERING COMPANY
6355 N.W. 36th. St., Ste. 305, VIRGINIA GARDENS, FLORIDA 33166
Phone : (305)871-1530 . Fax : (305)871-1531
e-mail: tilteco@aol.com
CA-0006719
WALTER A. TILLIT Jr., P.E.
FLORIDA Lic. # 44167

WALTER A. TILLIT JR. LICENSE No. 44167 STATE OF FLORIDA PROFESSIONAL ENGINEER

P.E. SEAL/SIGNATURE/DATE

CORNER MULLION DETAILS (PLAN)

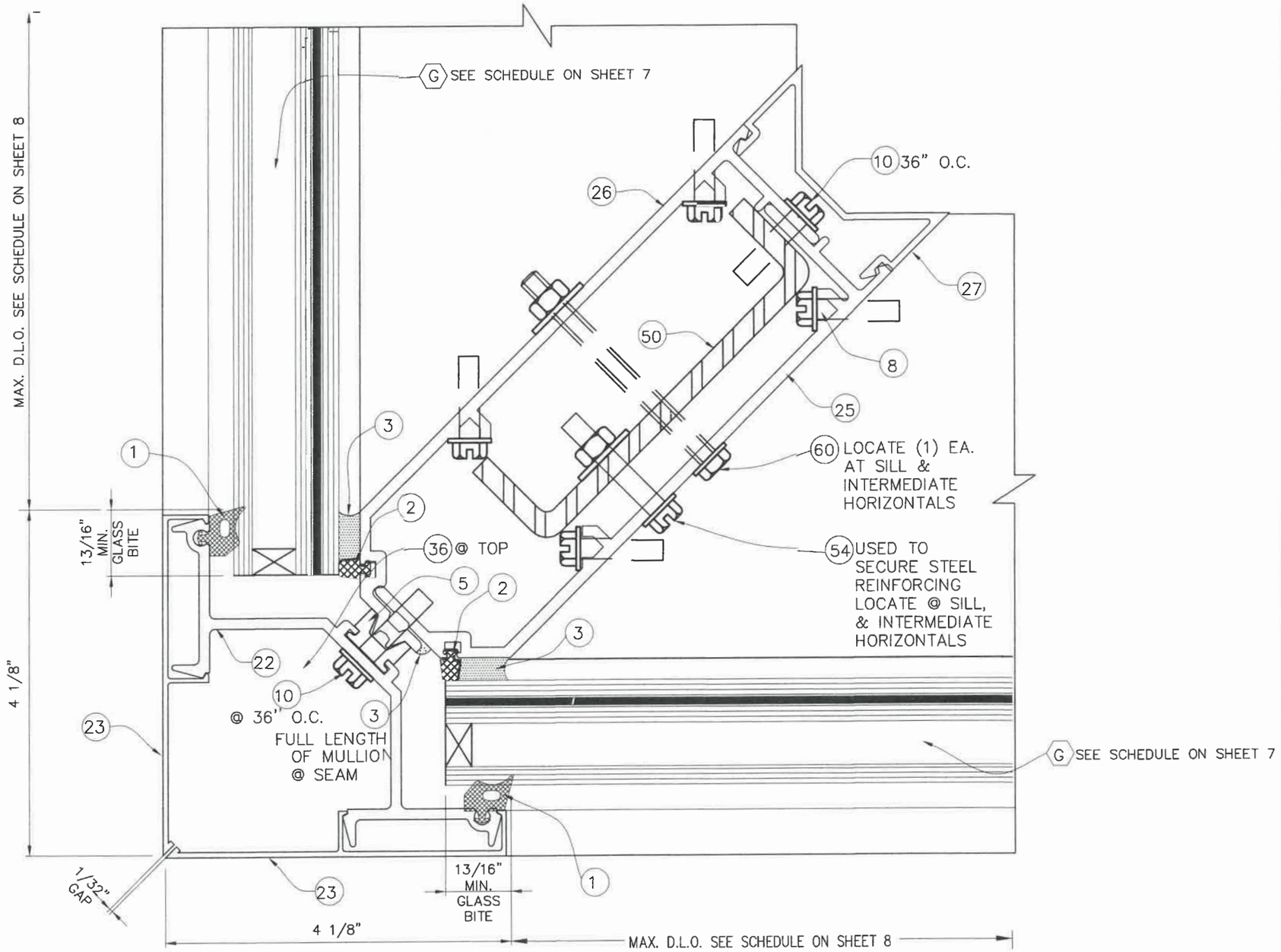

14
90 DEG CORNER CAPTURED PLAN

FLORIDA BUILDING CODE (High & Non High Velocity Hurricane Zone)

HR-251 CAPTURED CURTAIN WALL SYSTEM
LARGE & SMALL MISSILE IMPACT INSULATED G LASS

Oldcastle BuildingEnvelope™
803 Airport Rd - Terrell, TX 75160
www.OldcastleBE.com - Phone 800-869-4567

REV. No	DESCRIPTION	DATE	REV. No	DESCRIPTION	DATE
1	OLD 18-032	04/15/21	3		
2			4		

M.P
DRAWN BY

04/15/2021
DATE

21-058
DRAWING No

SHEET 23 OF 36

©2021 TILTECO, INC

TILTECO INC.
TILLIT TESTING & ENGINEERING COMPANY
6355 N.W. 36th. St., Ste. 305, VIRGINIA GARDENS, FLORIDA 33166
Phone : (305)871-1530 . Fax : (305)871-1531
e-mail: tilteco@aol.com
CA-00006719
WALTER A. TILLIT Jr., P.E.
FLORIDA Lic. # 44167

WALTER A. TILLIT JR. LICENSED PROFESSIONAL ENGINEER No. 44167 STATE OF FLORIDA

SEAL/SIGNATURE/DATE

JAMBS CONNECTIONS AT INSIDE CORNER (PLAN)

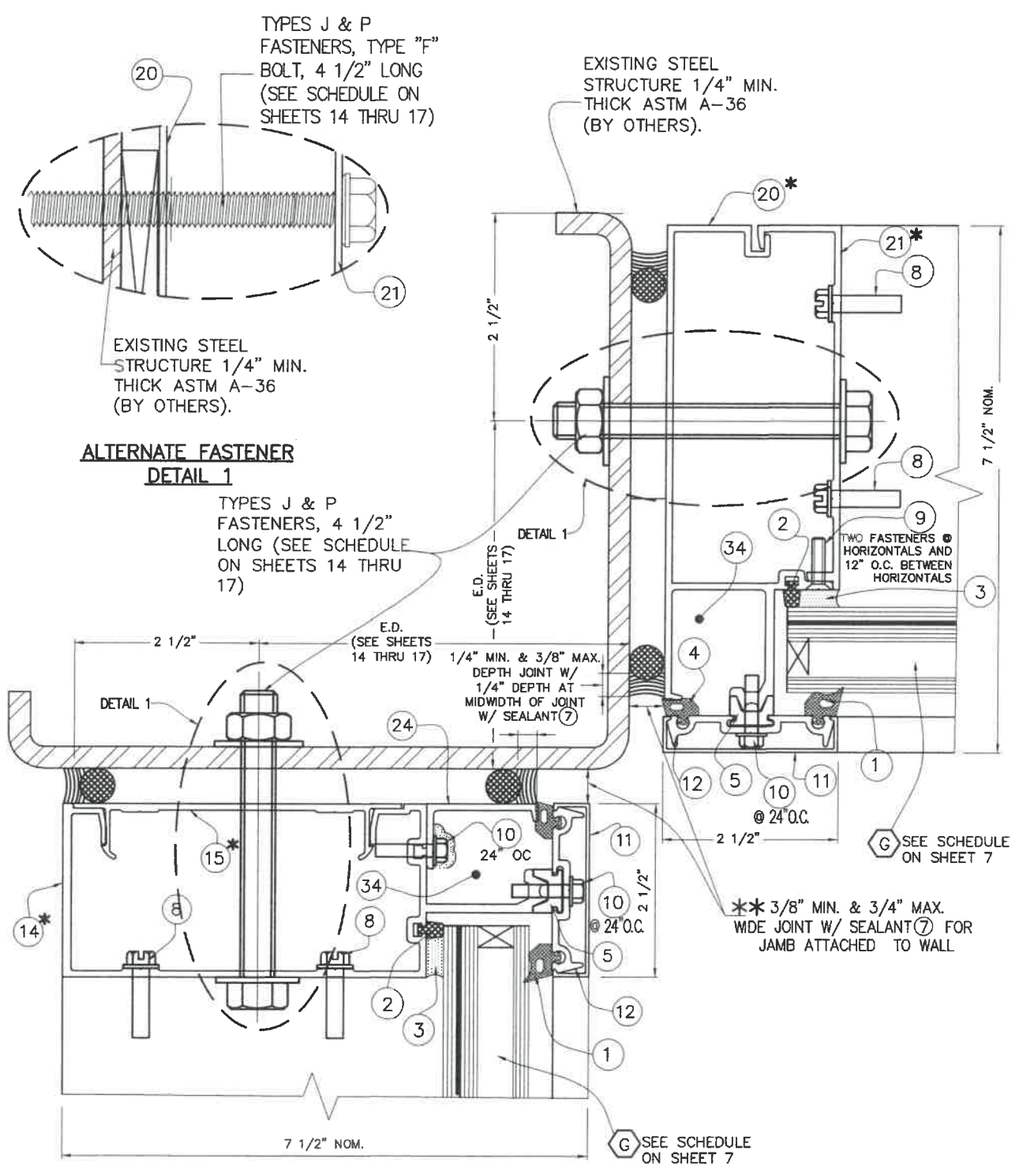

8, 9 @ INSIDE CORNER
JAMB TO EXISTING STEEL (PLAN)

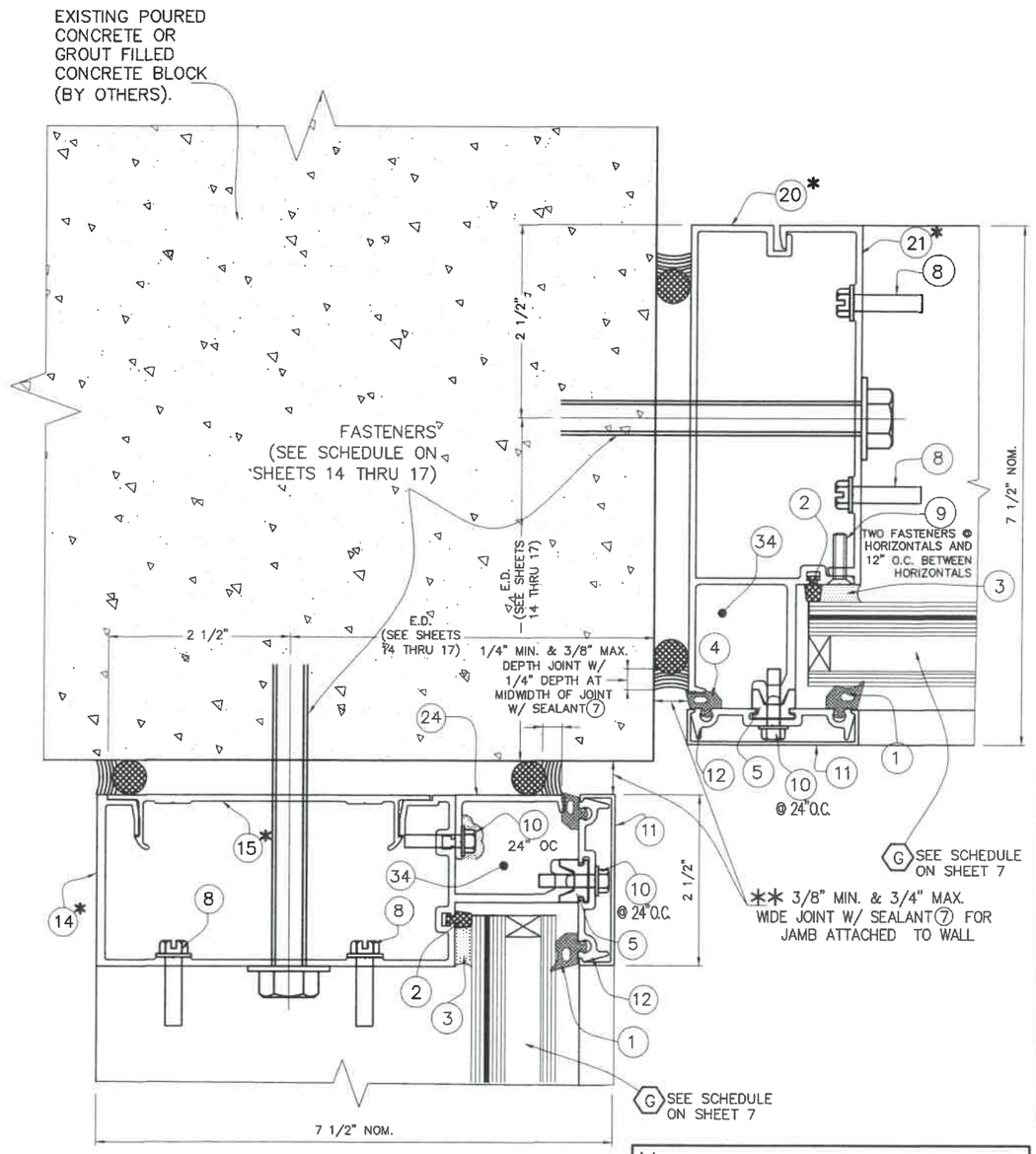

8A, 9A @ INSIDE CORNER
JAMB TO POURED CONCRETE (PLAN)

* JAMBS MAY BE 14 + 15 OR 20 + 21 INTERCHANGABLE

** NOTE: ABOVE INDICATED MAXIMUM AND MINIMUM VALUES FOR SPECIFIED SEALANT VERTICAL JOINT WIDTH AT JAMBS CONNECTED TO WALL HAVE BEEN DETERMINED ONLY TAKING INTO CONSIDERATION THE ACTUAL MOVEMENT OF GLASS WALL AT JAMBS DUE TO THERMAL, WIND AND ITS OWN CONSTRUCTION TOLERANCE, AND NOT PERFORMANCE FACTORS FROM THE SURROUNDING STRUCTURE.

FLORIDA BUILDING CODE (High & Non High Velocity Hurricane Zone)

M.P DRAWN BY
04/15/2021 DATE
21-058 DRAWING No
SHEET 24 OF 36

HR-251 CAPTURED CURTAIN WALL SYSTEM
LARGE & SMALL MISSILE IMPACT INSULATED GLASS

Oldcastle BuildingEnvelope™
803 Airport Rd - Terrell, TX 75160
www.OldcastleBE.com - Phone 800-869-4567

REV. No	DESCRIPTION	DATE	REV. No	DESCRIPTION	DATE
1	OLD 18-032	04/13/21	3		
2			4		

©2021 TILTECO, INC

TILTECO INC.
TILLIT TESTING & ENGINEERING COMPANY
8355 N.W. 36th. St., Ste. 305, VIRGINIA GARDENS, FLORIDA 33166
Phone : (305)871-1530 . Fax : (305)871-1531
e-mail: tilteco@aol.com
CA-0006719
WALTER A. TILLIT Jr., P.E.
FLORIDA Lic. # 44167

SEAL/SIGNATURE/DATE

WALTER A. TILLIT JR. LICENSE No. 44167 STATE OF FLORIDA PROFESSIONAL ENGINEER

JAMB MULLIONS NOT ATTACHED TO INSIDE CORNER OF EXISTING STRUCTURE FOR SINGLE SPAN ONLY (PLAN)

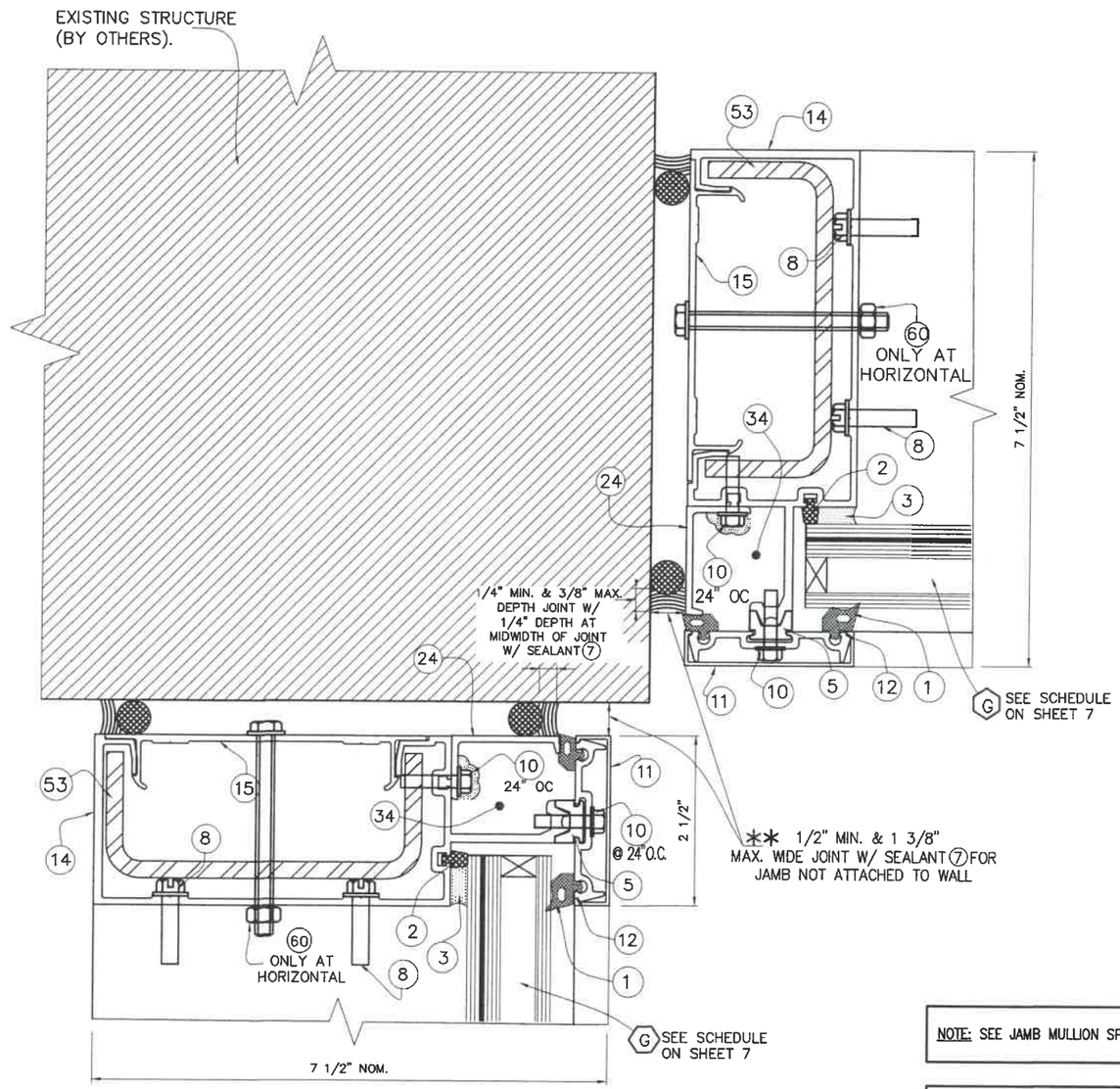

8B @ INSIDE CORNER
JAMB MULLION TO EXISTING
STRUCTURE (PLAN)

NOTE: SEE JAMB MULLION SPAN SCHEDULE ON SHEET 22A.

** NOTE: ABOVE INDICATED MAXIMUM AND MINIMUM VALUES FOR SPECIFIED SEALANT VERTICAL JOINT WIDTH AT JAMBS NOT CONNECTED TO WALL (FREE STANDING) HAVE BEEN DETERMINED ONLY TAKING INTO CONSIDERATION THE ACTUAL MOVEMENT OF GLASS WALL AT JAMBS DUE TO THERMAL, WIND AND ITS OWN CONSTRUCTION TOLERANCE, AND NOT PERFORMANCE FACTORS FROM THE SURROUNDING STRUCTURE.

FLORIDA BUILDING CODE (High & Non High Velocity Hurricane Zone)

©2021 TILTECO, INC

TILTECO INC.
TILLIT TESTING & ENGINEERING COMPANY
6355 N.W. 36th. St., Ste. 305, VIRGINIA GARDENS, FLORIDA 33166
Phone : (305)871-1530 . Fax : (305)871-1531
e-mail: tilteco@aol.com
CA-0006719
WALTER A. TILLIT Jr., P.E.
FLORIDA Lic. # 44167

HR-251 CAPTURED CURTAIN WALL SYSTEM
LARGE & SMALL MISSILE IMPACT INSULATED GLASS

Oldcastle BuildingEnvelope™
803 Airport Rd - Terrell, TX 75160
www.OldcastleBE.com - Phone 800-869-4567

REV. No	DESCRIPTION	DATE	REV. No	DESCRIPTION	DATE
1	OLD 18-032	04/15/21	3		
2			4		

M.P
DRAWN BY

04/15/2021
DATE

21-058
DRAWING No

SHEET 24A OF 36

SEAL/SIGNATURE/DATE

WALTER A. TILLIT JR. LICENSE No. 44167 STATE OF FLORIDA PROFESSIONAL ENGINEER

SILL & HEAD CONNECTION DETAILS AT SINGLE SPAN & SILL CONNECTION DETAIL FOR TWIN SPAN (PLANS)

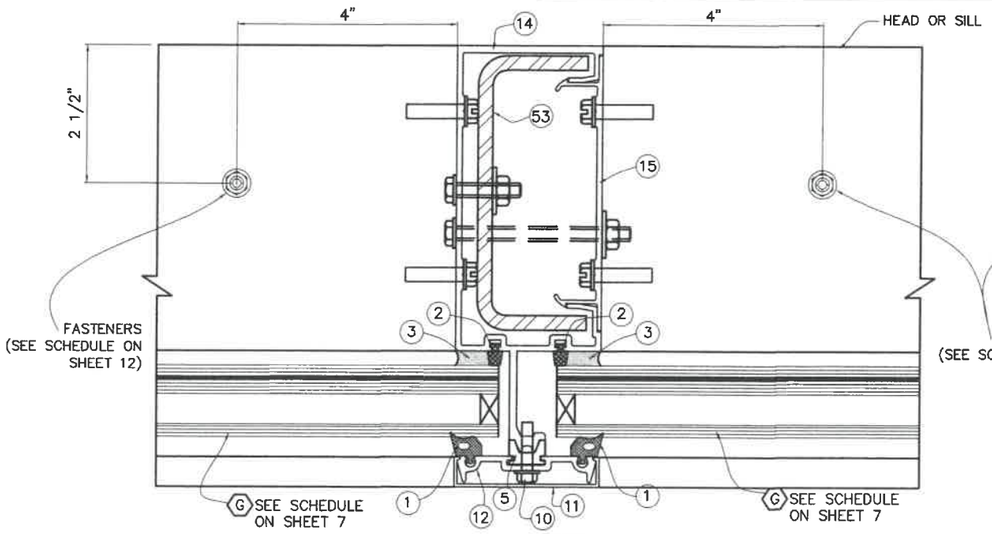

1

CONNECTION AT INTERIOR MULLION

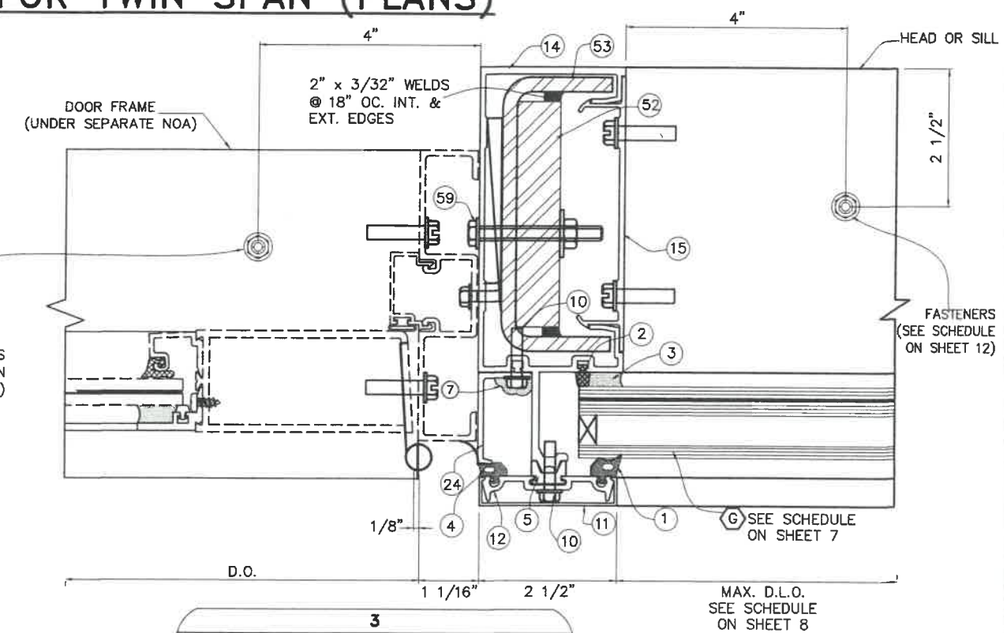

3

CONNECTION AT INTERIOR MULLION AT DOOR

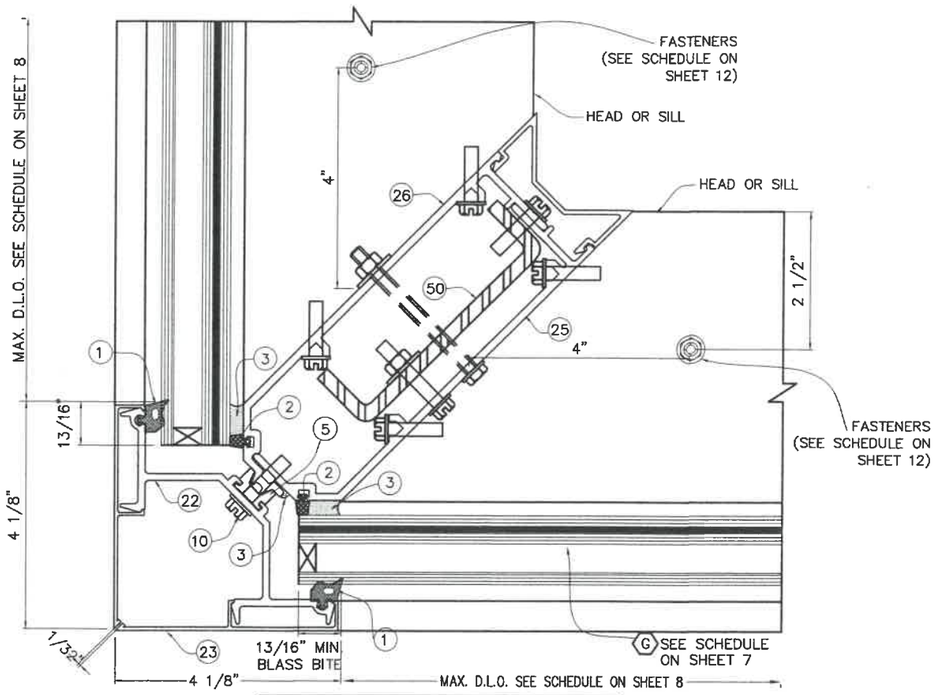

2

CONNECTION AT CORNER MULLION

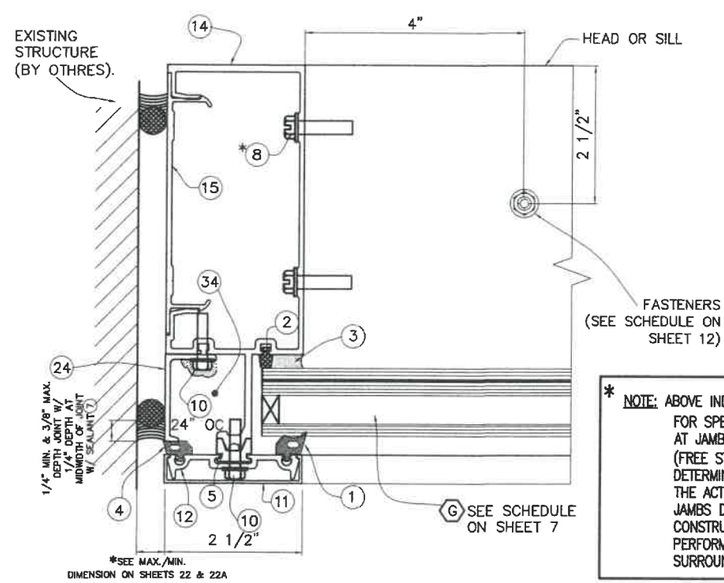

4

CONNECTION AT JAMBS

* NOTE: ABOVE INDICATED MAXIMUM AND MINIMUM VALUES FOR SPECIFIED SEALANT VERTICAL JOINT WIDTH AT JAMBS CONNECTED AND NOT CONNECTED (FREE STANDING) TO WALL HAVE BEEN DETERMINED ONLY TAKING INTO CONSIDERATION THE ACTUAL MOVEMENT OF GLASS WALL AT JAMBS DUE TO THERMAL, WIND AND ITS OWN CONSTRUCTION TOLERANCE, AND NOT PERFORMANCE FACTORS FROM THE SURROUNDING STRUCTURE.

FLORIDA BUILDING CODE (High & Non High Velocity Hurricane Zone)

M.P
DRAWN BY

04/15/2021
DATE

21-058
DRAWING No

SHEET 25 OF 36

HR-251 CAPTURED CURTAIN WALL SYSTEM
LARGE & SMALL MISSILE IMPACT INSULATED GLASS

Oldcastle BuildingEnvelope™
803 Airport Rd - Terrell, TX 75160
www.OldcastleBE.com - Phone 800-869-4567

REV. No	DESCRIPTION	DATE	REV. No	DESCRIPTION	DATE
1	OLD 18-0332	04/15/21	3		
2			4		

©2021 TILTECO, INC

TILTECO INC.
TILLIT TESTING & ENGINEERING COMPANY
6355 N.W. 36th. St., Ste. 305, VIRGINIA GARDENS, FLORIDA 33166
Phone : (305)871-1530 . Fax : (305)871-1531
e-mail: tilteco@aol.com
CA-0006719
WALTER A. TILLIT Jr., P.E.
FLORIDA Lic. # 44167

WALTER A. TILLIT JR. LICENSE No. 44167 STATE OF FLORIDA PROFESSIONAL ENGINEER

4/19/2021

P.E. SEAL/SIGNATURE/DATE

OPTION #1 FOR HEAD CONNECTION OF TWIN SPAN STANDARD MULLIONS

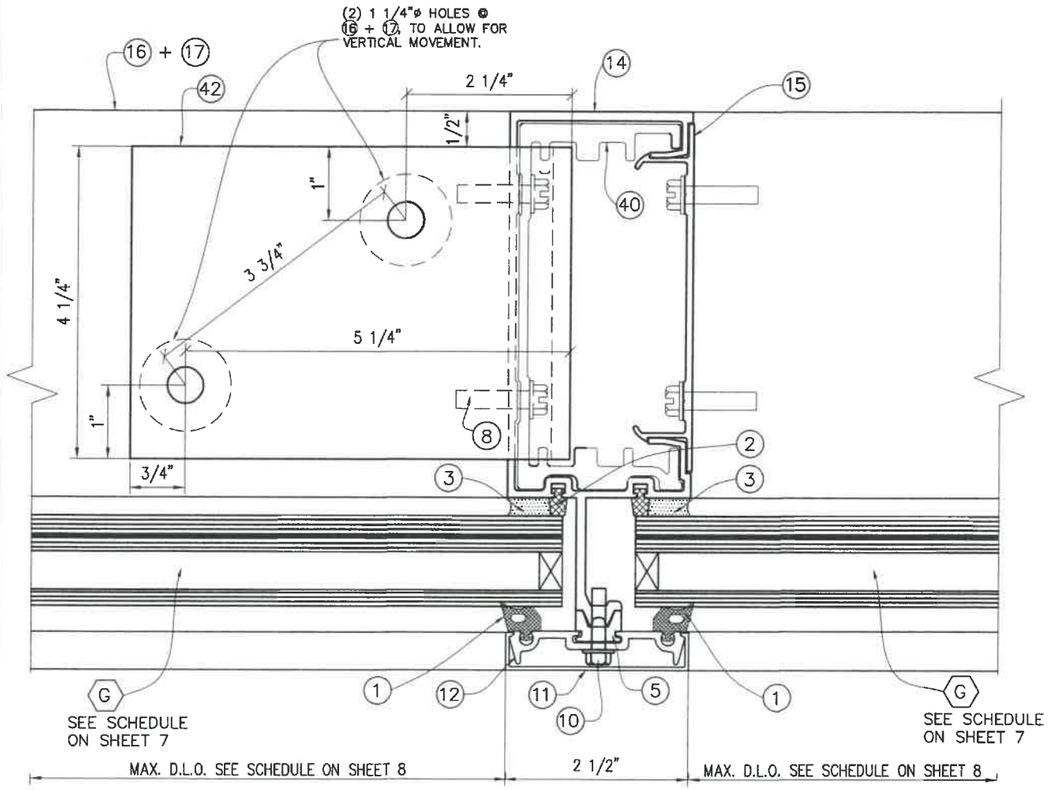

1

17
HEAD ANCHOR (PLAN)

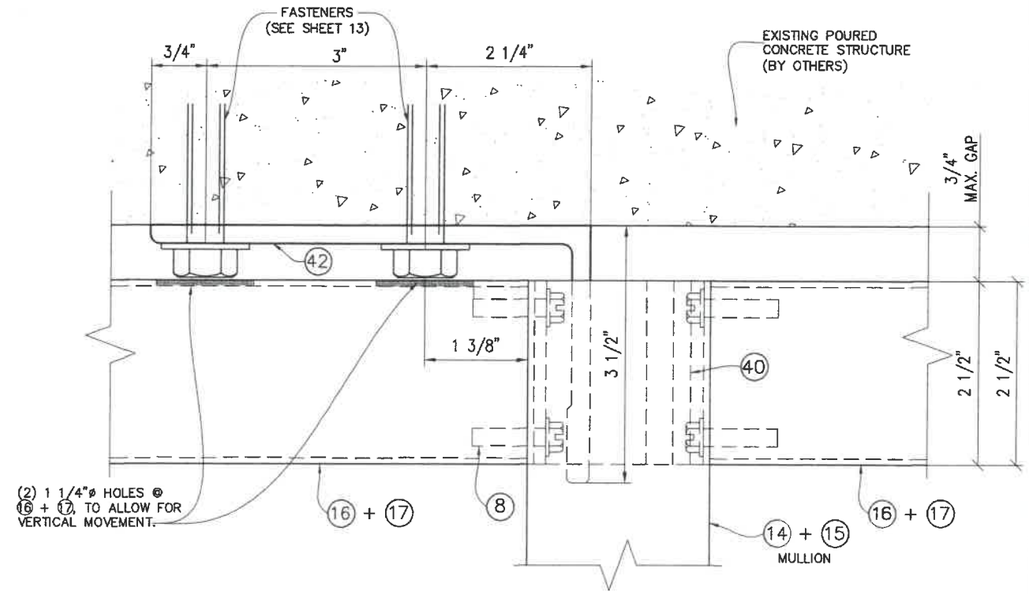

TO EXISTING POURED CONCRETE STRUCTURE

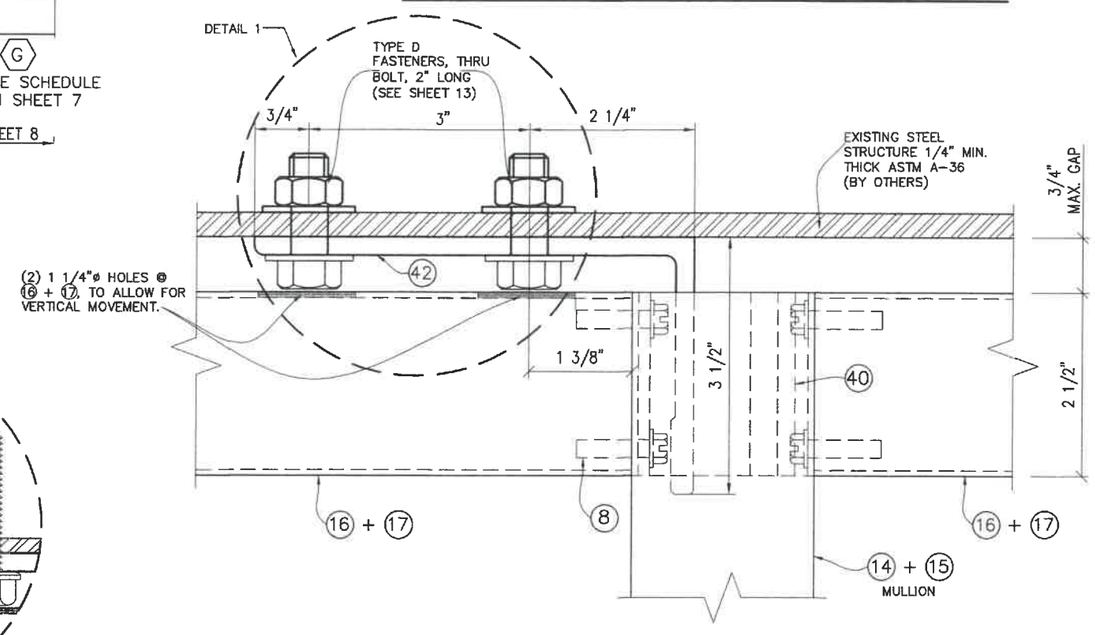

TO EXISTING STEEL STRUCTURE

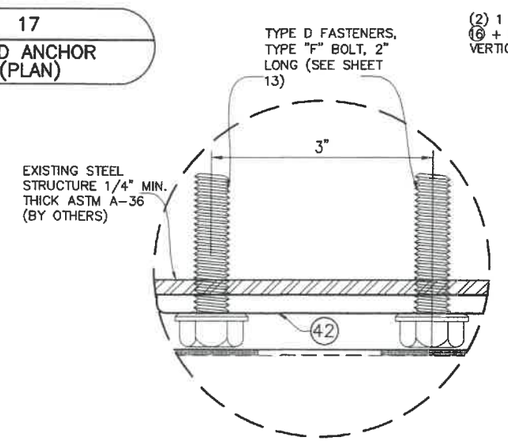

ALTERNATE FASTENER
DETAIL 1

EXTERIOR ELEVATIONS 1

FLORIDA BUILDING CODE (High & Non High Velocity Hurricane Zone)

©2021 TILTECO, INC

TILTECO INC.
TILLIT TESTING & ENGINEERING COMPANY
6355 N.W. 36th. St., Ste. 305, VIRGINIA GARDENS, FLORIDA 33166
Phone : (305)871-1530 . Fax : (305)871-1531
e-mail: tilteco@aol.com
CA-0006719
WALTER A. TILLIT Jr., P.E.
FLORIDA Lic. # 44167

WALTER A. TILLIT JR. LICENSE No. 44167 STATE OF FLORIDA PROFESSIONAL ENGINEER

P.E. SEAL/SIGNATURE/DATE

M.P
DRAWN BY

04/15/2021
DATE

21-058
DRAWING No

SHEET 26 OF 36

HR-251 CAPTURED CURTAIN WALL SYSTEM
LARGE & SMALL MISSILE IMPACT INSULATED GLASS

Oldcastle BuildingEnvelope™
803 Airport Rd - Terrell, TX 75160
www.OldcastleBE.com - Phone 800-969-4567

REV. No	DESCRIPTION	DATE
1	OLD 18-032	04/19/21
2		
3		
4		

REV. No	DESCRIPTION	DATE

OPTION #2 FOR HEAD CONNECTION OF TWIN SPAN STANDARD MULLIONS

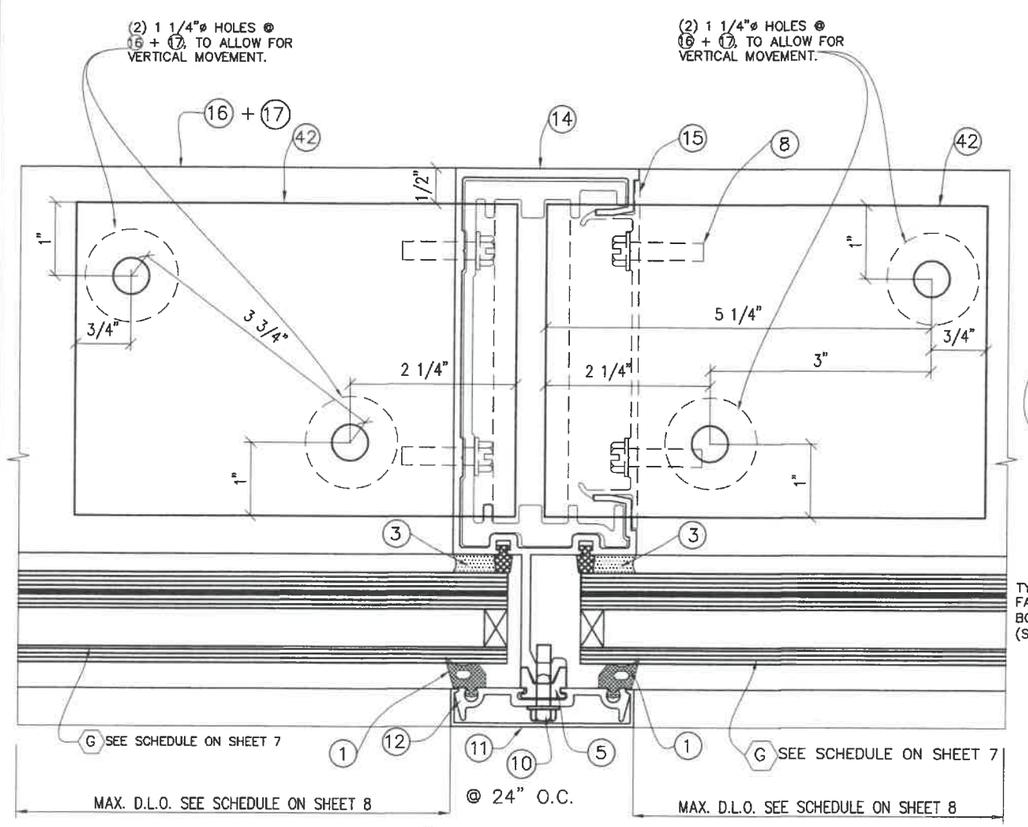

1

17A
HEAD ANCHOR
(PLAN)

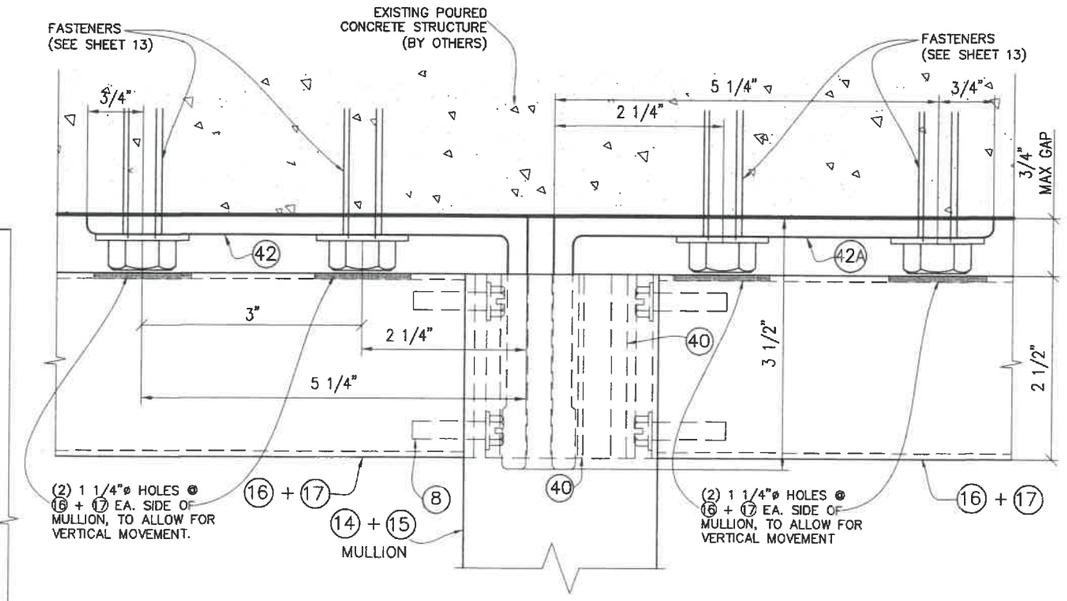

TO EXISTING POURED CONCRETE STRUCTURE

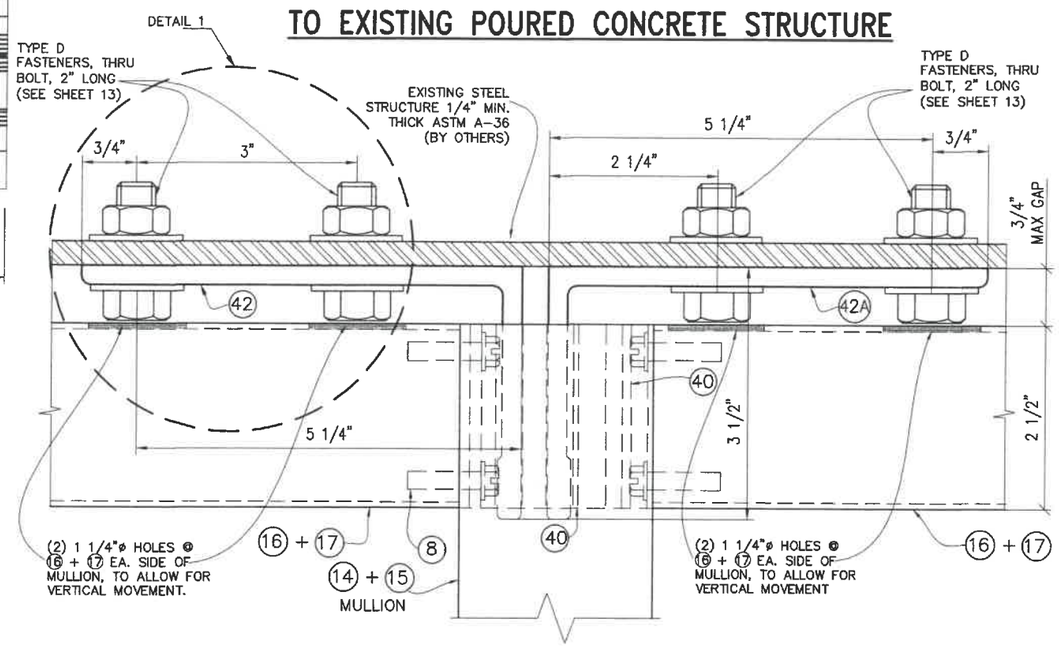

TO EXISTING STEEL STRUCTURE

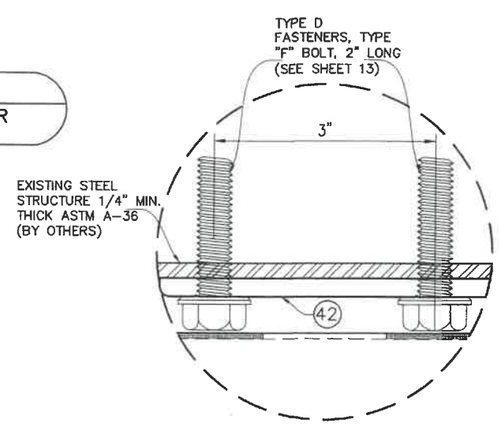

ALTERNATE FASTENER
DETAIL 1

EXTERIOR ELEVATIONS 1

FLORIDA BUILDING CODE (High & Non High Velocity Hurricane Zone)

HR-251 CAPTURED CURTAIN WALL SYSTEM
LARGE & SMALL MISSILE IMPACT INSULATED GLASS

Oldcastle BuildingEnvelope™
803 Airport Rd - Terrell, TX 75160
www.OldcastleBE.com - Phone 800-869-4567

REV. No	DESCRIPTION	DATE
1	OLD 18-032	04/15/21
2		
3		
4		

DATE	DESCRIPTION

M.P
DRAWN BY

04/15/2021
DATE

21-058
DRAWING No

SHEET 27 OF 36

©2021 TILTECO, INC

TILTECO INC.
TILLIT TESTING & ENGINEERING COMPANY
6355 N.W. 36th. St., Ste. 305, VIRGINIA GARDENS, FLORIDA 33166
Phone : (305)871-1530 . Fax : (305)871-1531
e-mail: tilteco@aol.com
CA-0006719
WALTER A. TILLIT Jr., P.E.
FLORIDA Lic. # 44167

SEAL/SIGNATURE/DATE

WALTER A. TILLIT JR. LICENSE No. 44167 STATE OF FLORIDA PROFESSIONAL ENGINEER

HEAD CONNECTION OF TWIN SPAN JAMBS

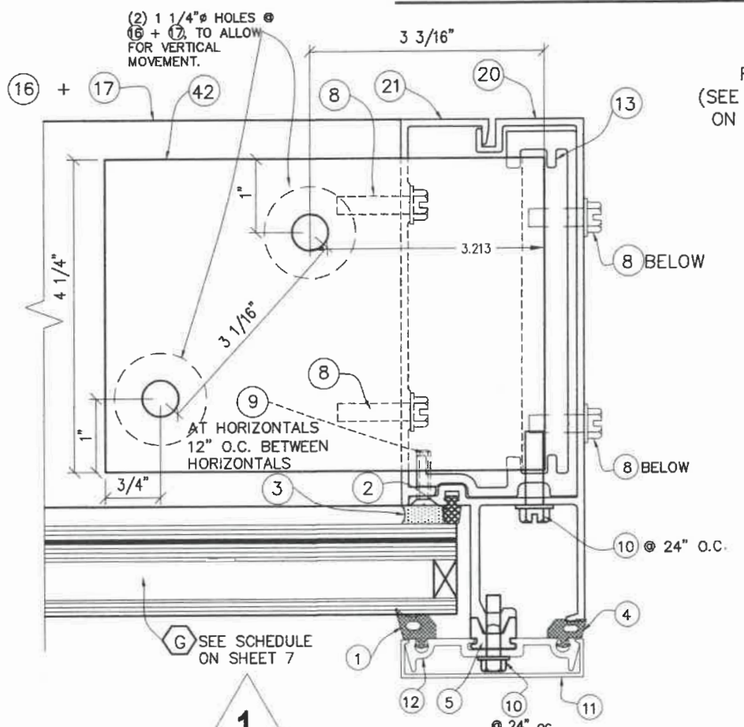

1

18
JAMB HEAD ANCHOR PLAN

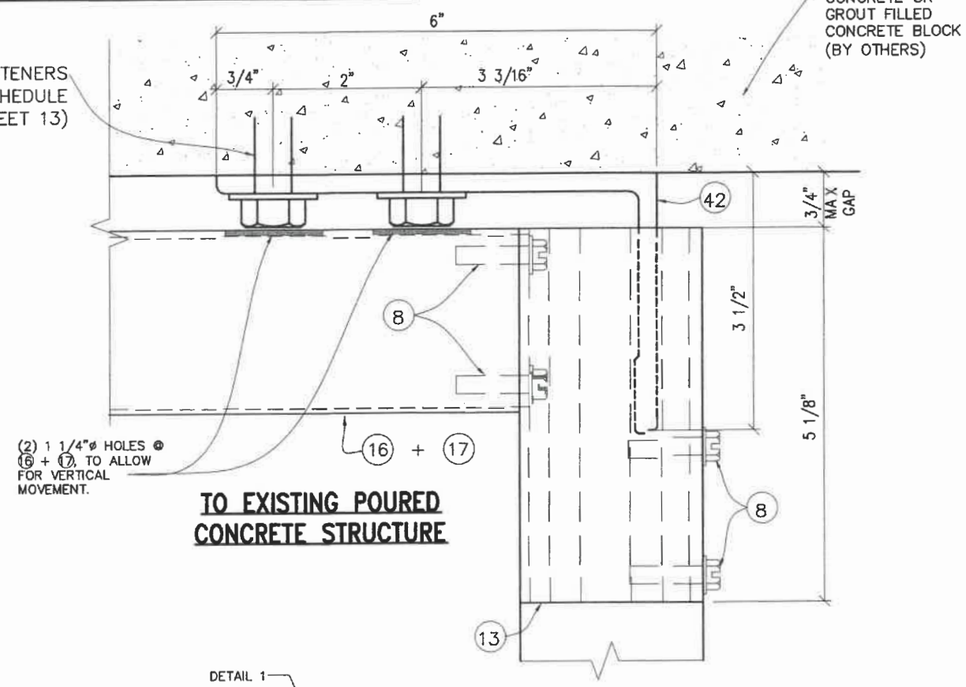

TO EXISTING POURED CONCRETE STRUCTURE

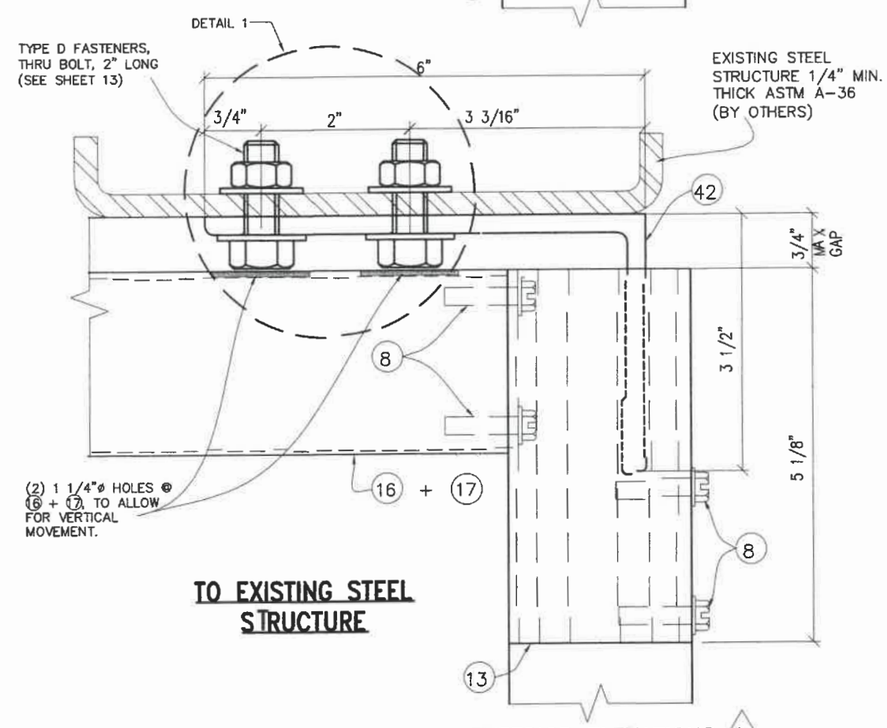

TO EXISTING STEEL STRUCTURE

EXTERIOR ELEVATIONS 1

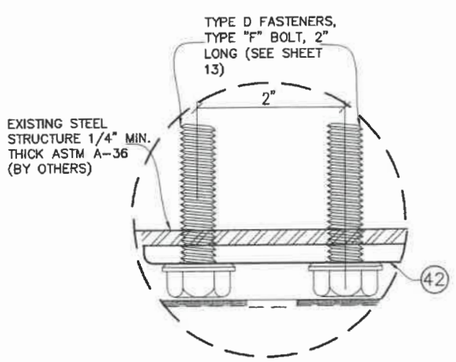

ALTERNATE FASTENER DETAIL 1

FLORIDA BUILDING CODE (High & Non High Velocity Hurricane Zone)

©2021 TILTECO, INC

TILTECO INC
TILLIT TESTING & ENGINEERING COMPANY
6355 N.W. 36th. St., Ste. 305, VIRGINIA GARDENS, FLORIDA 33166
Phone : (305)871-1530 . Fax : 871-1531
e-mail: tilteco@aol.com
CA-0006719
WALTER A. TILLIT Jr., P.E.
FLORIDA Lic. # 44167

M.P
DRAWN BY

04/15/2021
DATE

21-058
DRAWING No

SHEET 28 OF 36

HR-251 CAPTURED CURTAIN WALL SYSTEM
LARGE & SMALL MISSILE IMPACT INSULATED GLASS

Oldcastle BuildingEnvelope™
803 Airport Rd - Terrell, TX 75160
www.OldcastleBE.com - Phone 800-869-4567

REV. No	DESCRIPTION	DATE	REV. No	DESCRIPTION	DATE
1	OLD 18-032	04/19/21	3		
2			4		

WALTER A. TILLIT JR. LICENSE No. 44167 STATE OF FLORIDA PROFESSIONAL ENGINEER

P.E. SEAL/SIGNATURE/DATE

HEAD CONNECTION DETAIL FOR TWIN SPAN CORNER MULLION

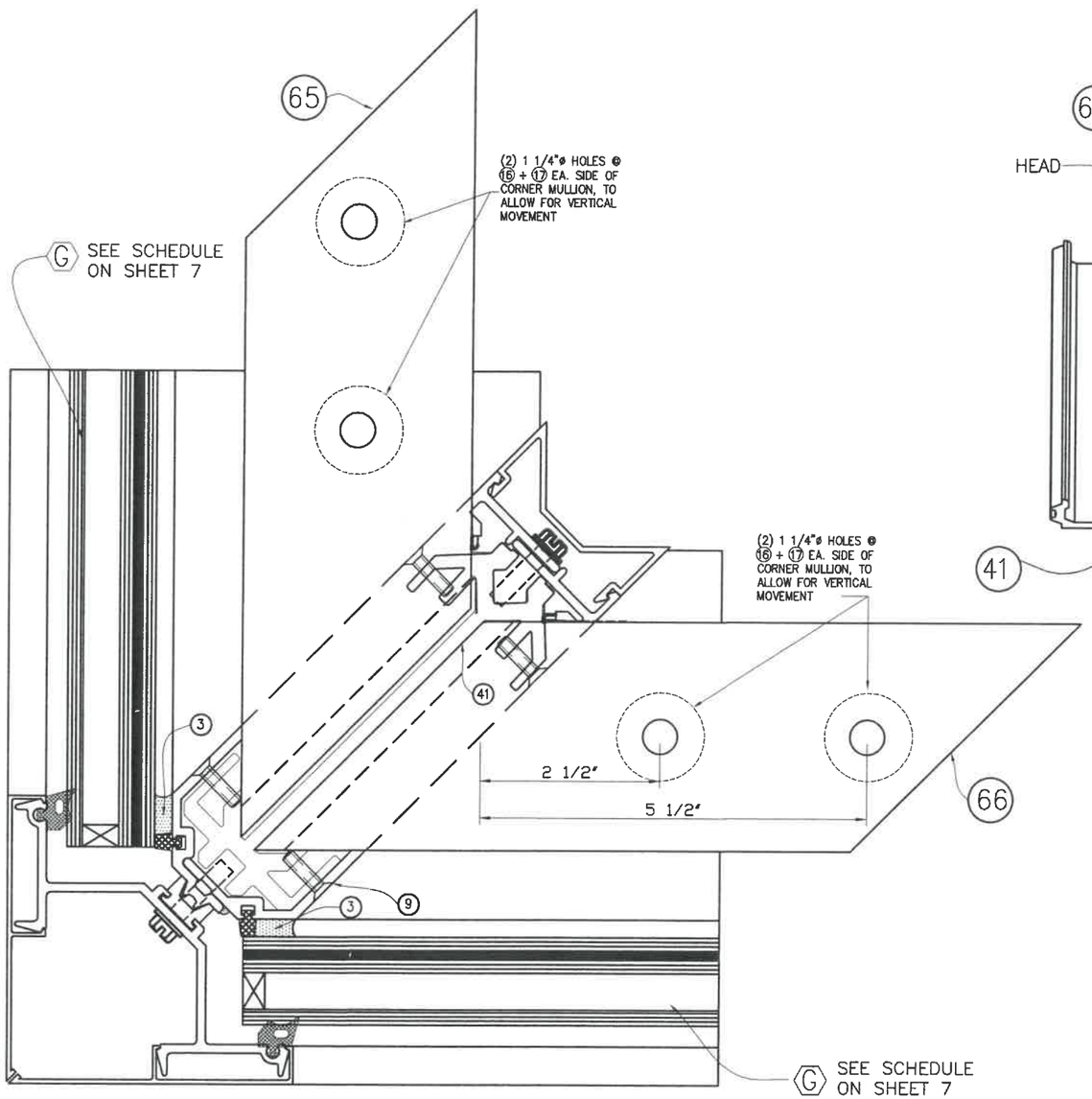

19
CORNER HEAD ANCHOR (PLAN)

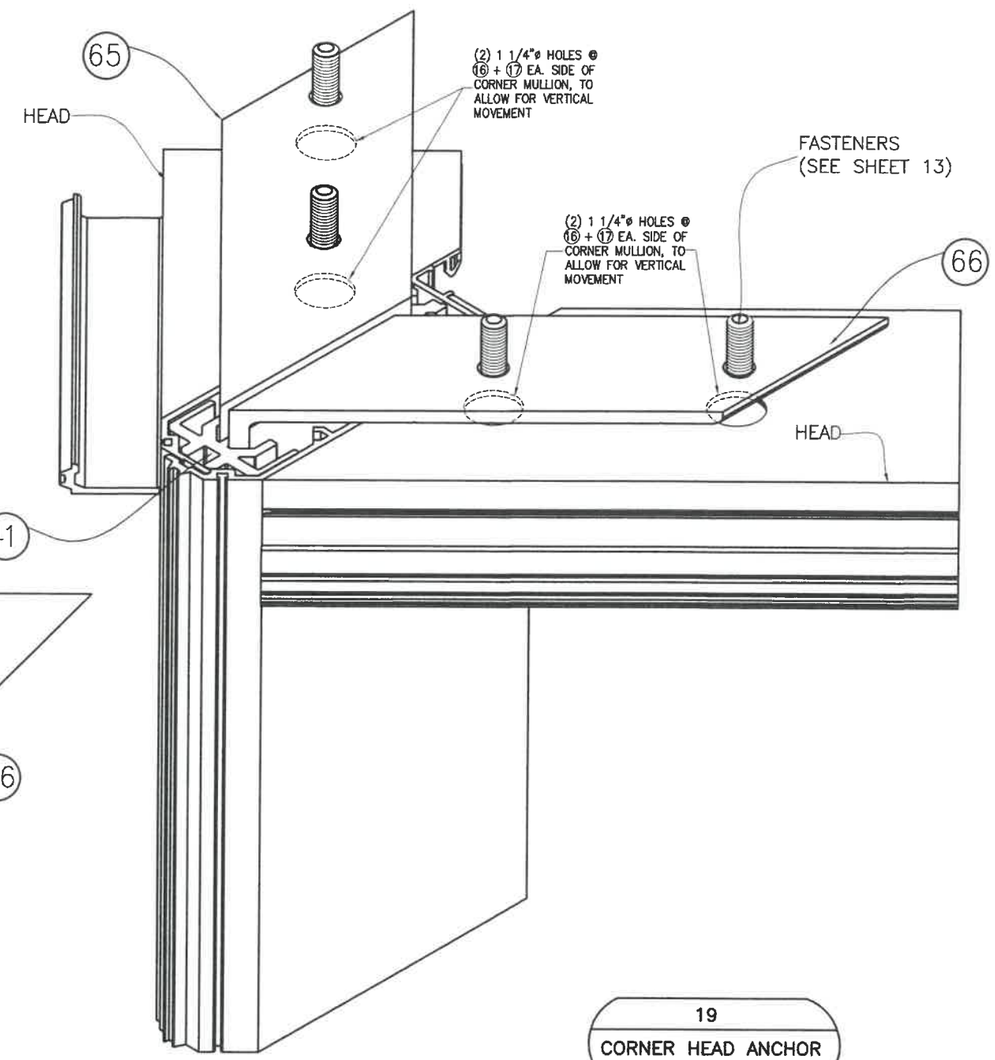

19
CORNER HEAD ANCHOR ISOMETRIC

FLORIDA BUILDING CODE (High & Non High Velocity Hurricane Zone)

HR-251 CAPTURED CURTAIN WALL SYSTEM
LARGE & SMALL MISSILE IMPACT INSULATED GLASS

M.P
DRAWN BY

04/15/2021
DATE

21-058
DRAWING No

SHEET 29 OF 36

Oldcastle BuildingEnvelope™
803 Airport Rd - Terrell, TX 75160
www.OldcastleBE.com - Phone 800-869-4567

REV. No	DESCRIPTION	DATE	REV. No	DESCRIPTION	DATE
1	OLD 18-032	04/15/21	3		
2			4		

©2021 TILTECO, INC

TILTECO INC.
TILLIT TESTING & ENGINEERING COMPANY
6355 N.W. 36th. St., Ste. 305, VIRGINIA GARDENS, FLORIDA 33166
Phone : (305)871-1530 . Fax : (305)871-1531
e-mail: tilteco@aol.com
CA-0006719
WALTER A. TILLIT Jr., P.E.
FLORIDA Lic. # 44167

WALTER A. TILLIT JR. LICENSE No. 44167 STATE OF FLORIDA PROFESSIONAL ENGINEER

P.E. SEAL/SIGNATURE/DATE

MULLION AND JAMB SPLICES AT TWIN SPAN ONLY (PLAN)

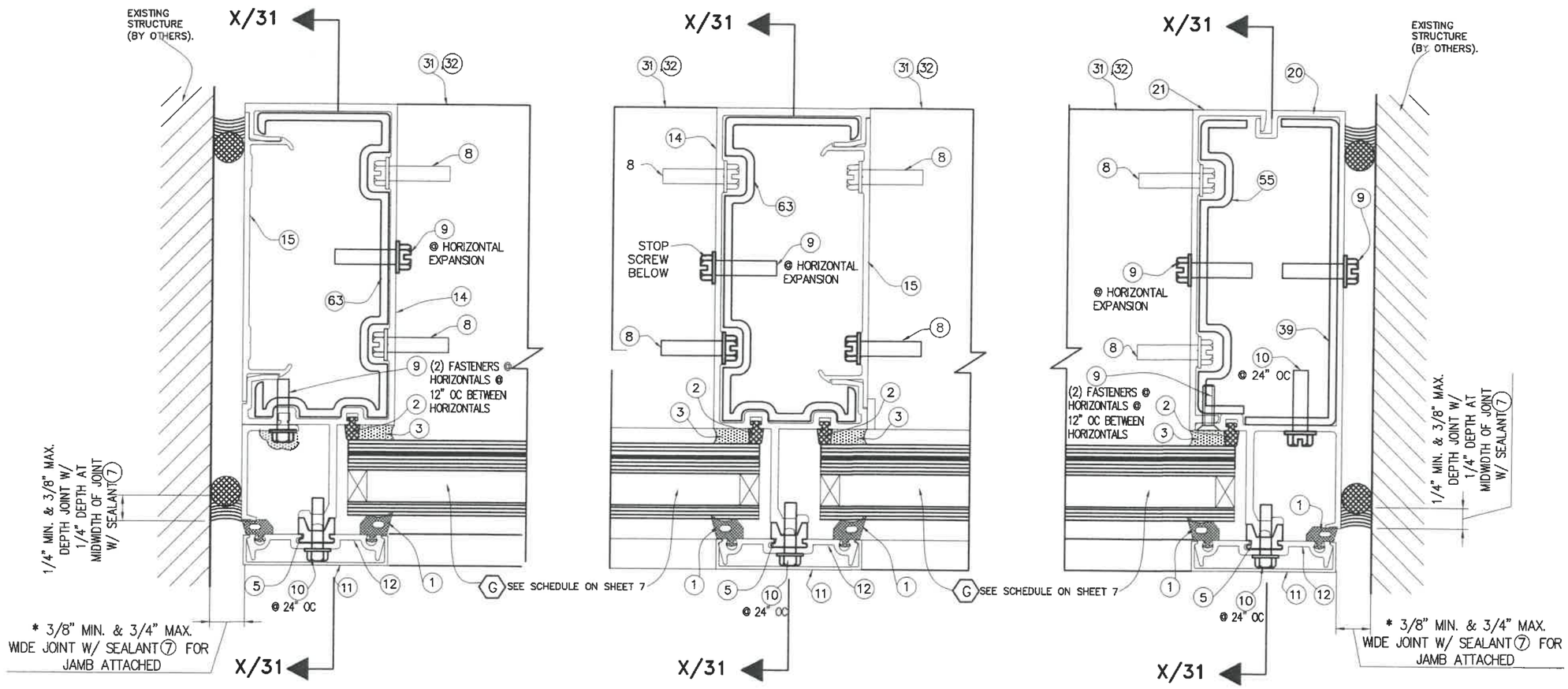

15A
SPLICE JOINT @ STANDARD JAMB W/63

15B
SPLICE JOINT @ STANDARD MULLION W/63

15C
SPLICE JOINT @ 2 PART JAMB W/55+39

* NOTE: ABOVE INDICATED MAXIMUM AND MINIMUM VALUES FOR SPECIFIED SEALANT VERTICAL JOINT WIDTH AT JAMBS CONNECTED TO WALL HAVE BEEN DETERMINED ONLY TAKING INTO CONSIDERATION THE ACTUAL MOVEMENT OF GLASS WALL AT JAMBS DUE TO THERMAL, WIND AND ITS OWN CONSTRUCTION TOLERANCE, AND NOT PERFORMANCE FACTORS FROM THE SURROUNDING STRUCTURE.

FLORIDA BUILDING CODE (High & Non High Velocity Hurricane Zone)

©2021 TILTECO, INC

TILTECO INC.
TILLIT TESTING & ENGINEERING COMPANY
6355 N.W. 36th. St., Ste. 305, VIRGINIA GARDENS, FLORIDA 33166
Phone : (305)871-1530 . Fax : (305)871-1531
e-mail: titteco@aol.com
CA-0006719
WALTER A. TILLIT Jr., P.E.
FLORIDA Lic. # 44167

WALTER A. TILLIT JR. LICENSE No. 44167 STATE OF FLORIDA PROFESSIONAL ENGINEER

P.E. SEAL/SIGNATURE/DATE

HR-251 CAPTURED CURTAIN WALL SYSTEM
LARGE & SMALL MISSILE IMPACT INSULATED GLASS

Oldcastle BuildingEnvelope™
803 Airport Rd - Terrell, TX 75160
www.OldcastleBE.com - Phone 800-869-4567

REV. No	DESCRIPTION	DATE
1	OLD 18-032	04/15/21
2		
3		
4		

REV. No	DESCRIPTION	DATE

M.P
DRAWN BY

04/15/2021
DATE

21-058
DRAWING No

SHEET 30 OF 36

MULLION AND JAMB SPLICES AT TWIN SPAN ONLY (SIDE VIEW)

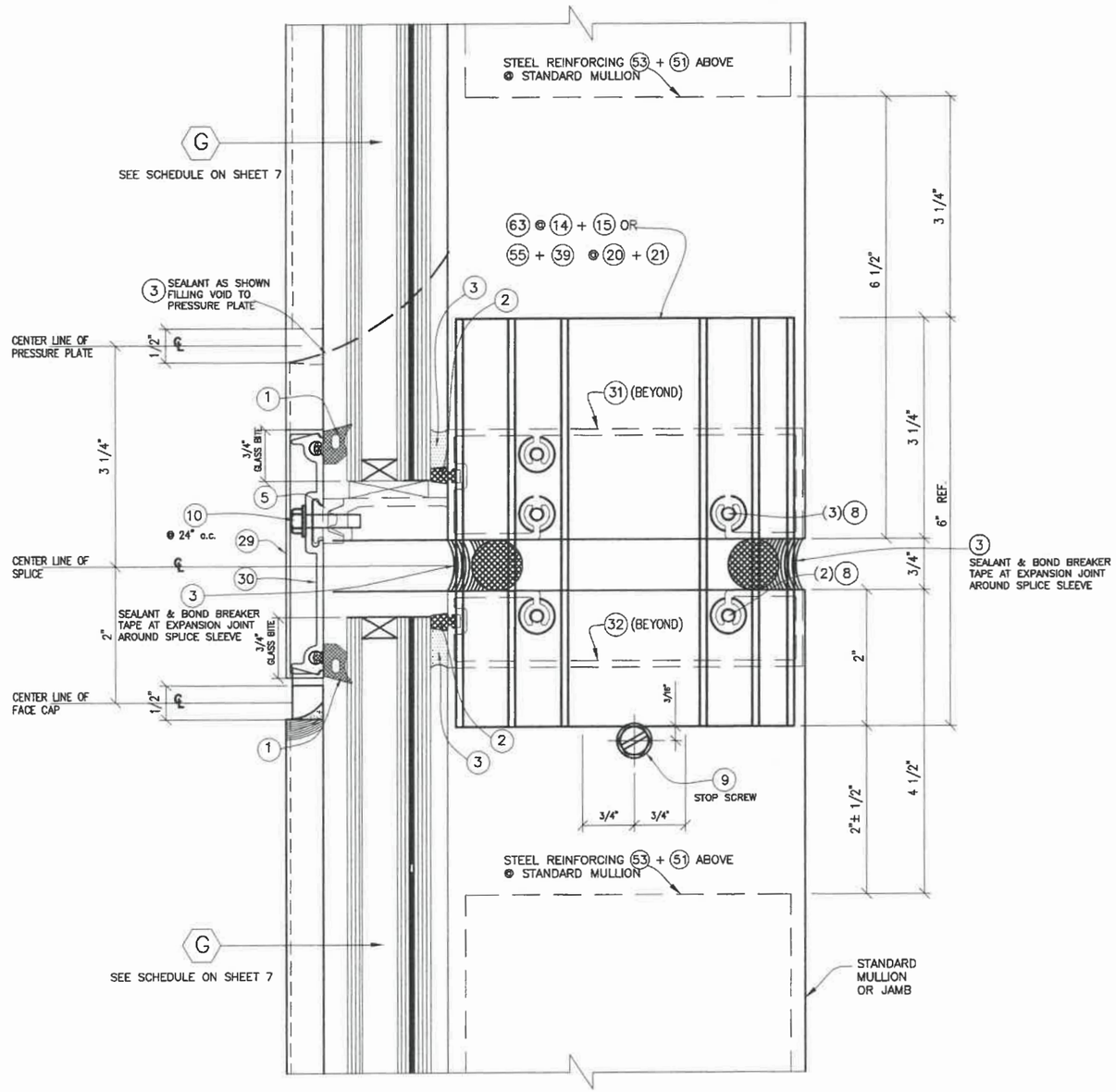

SECTION X–X
SPLICE JOINT @ STD MULLION/JAMB

FLORIDA BUILDING CODE (High & Non High Velocity Hurricane Zone)

HR-251 CAPTURED CURTAIN WALL SYSTEM
LARGE & SMALL MISSILE IMPACT INSULATED GLASS

Oldcastle BuildingEnvelope™
803 Airport Rd - Terrell, TX 75160
www.OldcastleBE.com - Phone 800-869-4567

REV. No	DESCRIPTION	DATE	REV. No	DESCRIPTION	DATE
1	OLD 18-032	04/16/21	3		
2			4		

M.P
DRAWN BY

04/15/2021
DATE

21–058
DRAWING No

SHEET 31 OF 36

©2021 TILTECO, INC

TILTECO INC.
TILLIT TESTING & ENGINEERING COMPANY
6355 N.W. 36th. St., Ste. 305, VIRGINIA GARDENS, FLORIDA 33166
Phone : (305)871-1530 . Fax : (305)871-1531
e-mail: tilteco@aol.com
CA-0006719
WALTER A. TILLIT Jr., P.E.
FLORIDA Lic. # 44167

WALTER A. TILLIT JR. LICENSED No. 44167 STATE OF FLORIDA PROFESSIONAL ENGINEER

P.E. SEAL/SIGNATURE/DATE

CORNER MULLION SPLICE AT TWIN SPAN (PLAN)

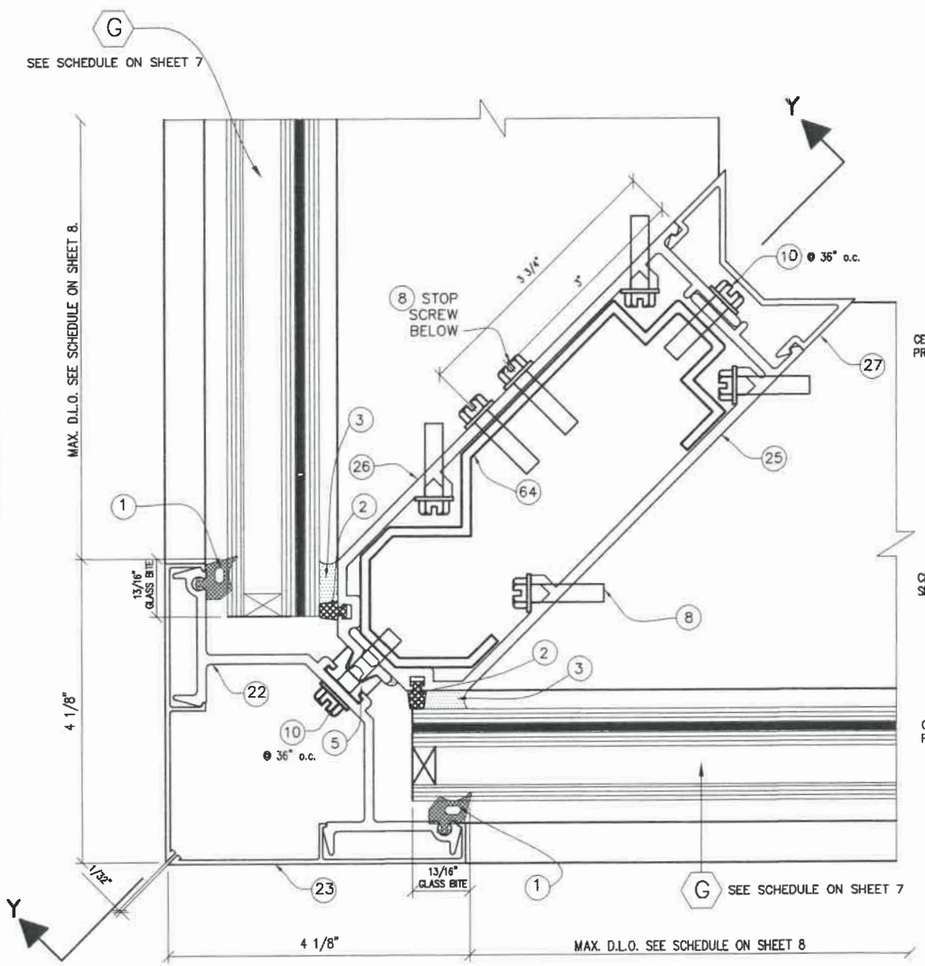

16
SPLICE JOINT @
90 DEG. CORNER
PLAN

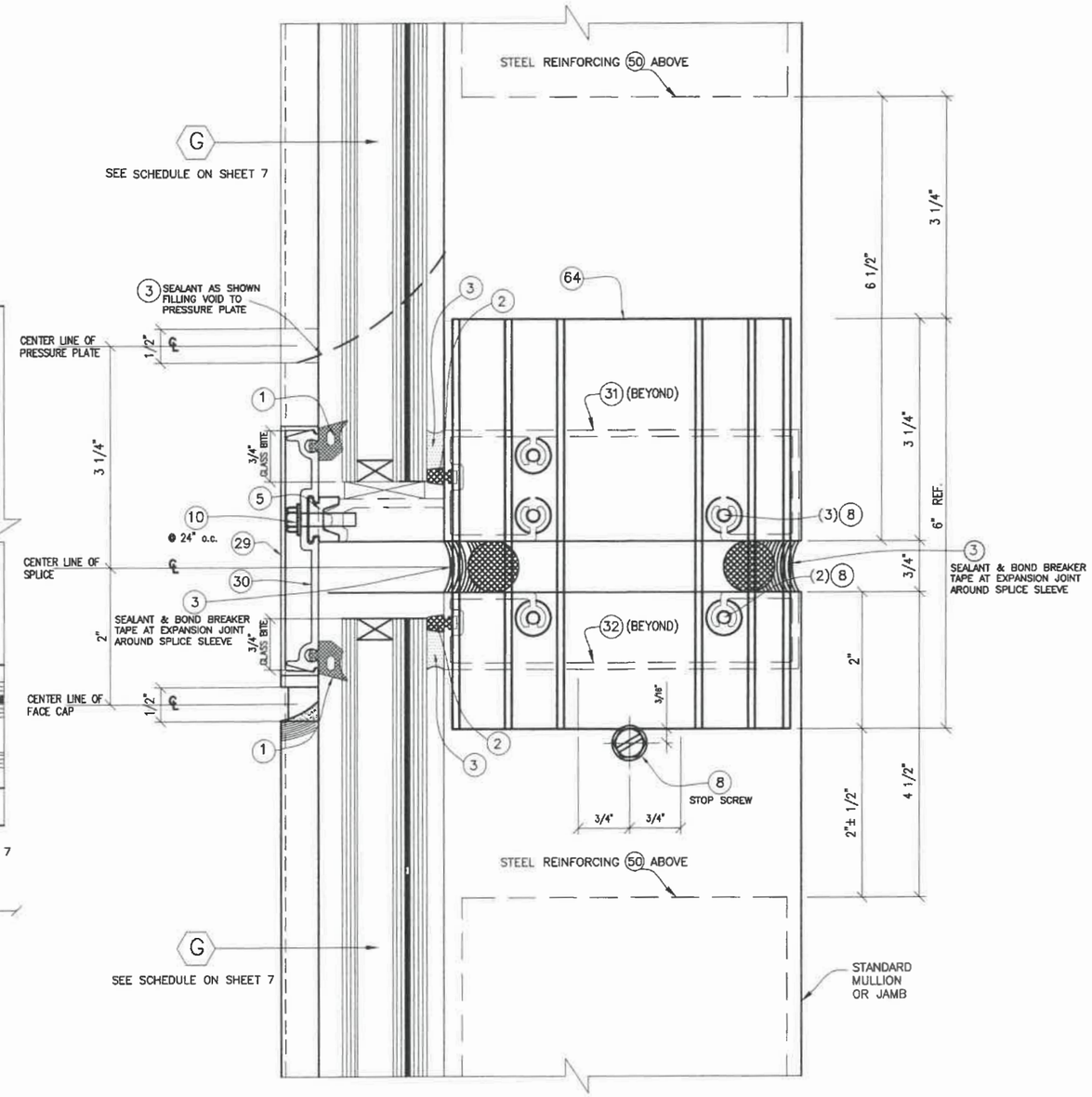

16
SPLICE JOINT @
90 DEG. CORNER
SECTION Y–Y

FLORIDA BUILDING CODE (High & Non High Velocity Hurricane Zone)

HR-251 CAPTURED CURTAIN WALL SYSTEM
LARGE & SMALL MISSILE IMPACT INSULATED GLASS

Oldcastle BuildingEnvelope™
803 Airport Rd - Terrell, TX 75160
www.OldcastleBE.com - Phone 800-869-4567

REV. No	DESCRIPTION	DATE	REV. No	DESCRIPTION	DATE
1	OLD 18-032	04/15/21	3		
2			4		

M.P
DRAWN BY

04/15/2021
DATE

21-058
DRAWING No

SHEET 32 OF 36

©2021 TILTECO, INC

TILTECO INC.
TILLIT TESTING & ENGINEERING COMPANY
6355 N.W. 36th. St., Ste. 305, VIRGINIA GARDENS, FLORIDA 33166
Phone : (305)871-1530 . Fax : (305)871-1531
e-mail: tilteco@aol.com
CA-0006719
WALTER A. TILLIT Jr., P.E.
FLORIDA Lic. # 44167

WALTER A. TILLIT JR. LICENSE No. 44167 STATE OF FLORIDA PROFESSIONAL ENGINEER

SEAL/SIGNATURE/DATE

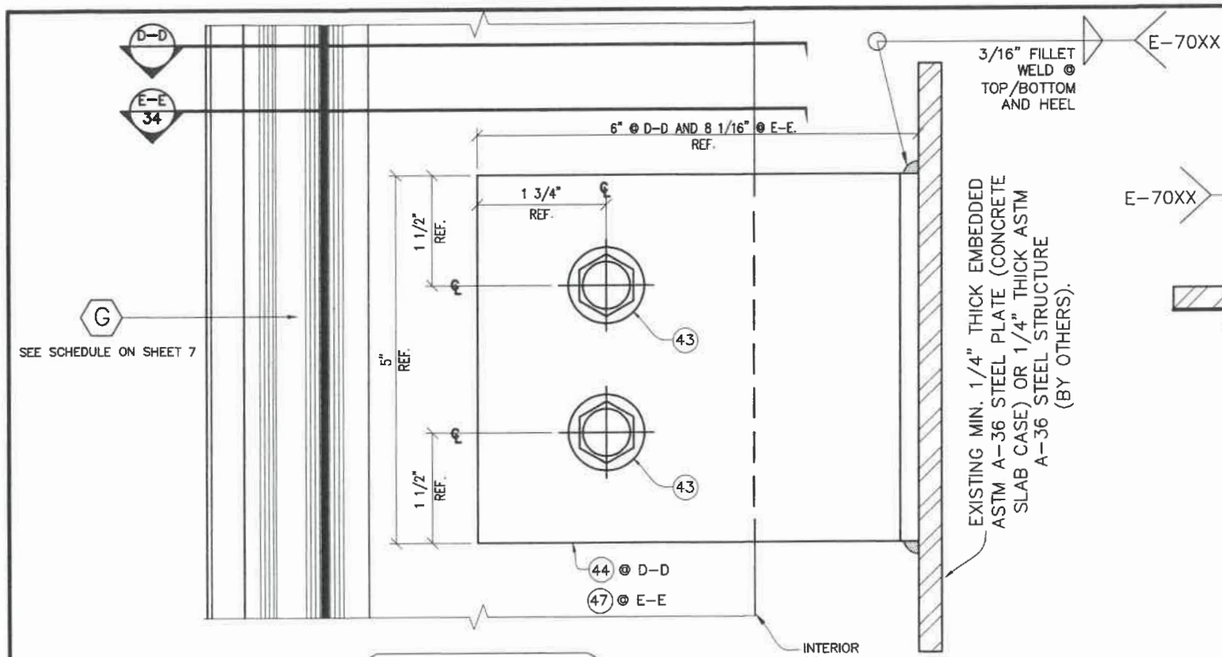

20
DEAD LOAD (D.L.) ANCHOR
SIDE VIEW

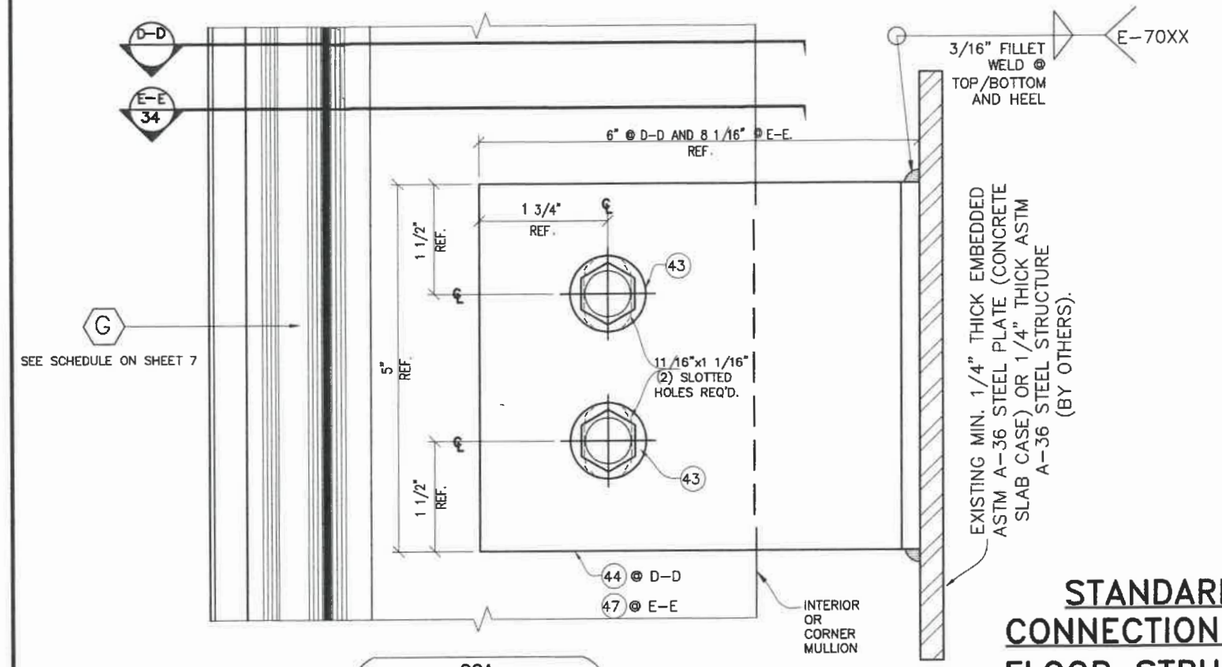

20A
WIND LOAD (W.L.) ANCHOR
SIDE VIEW

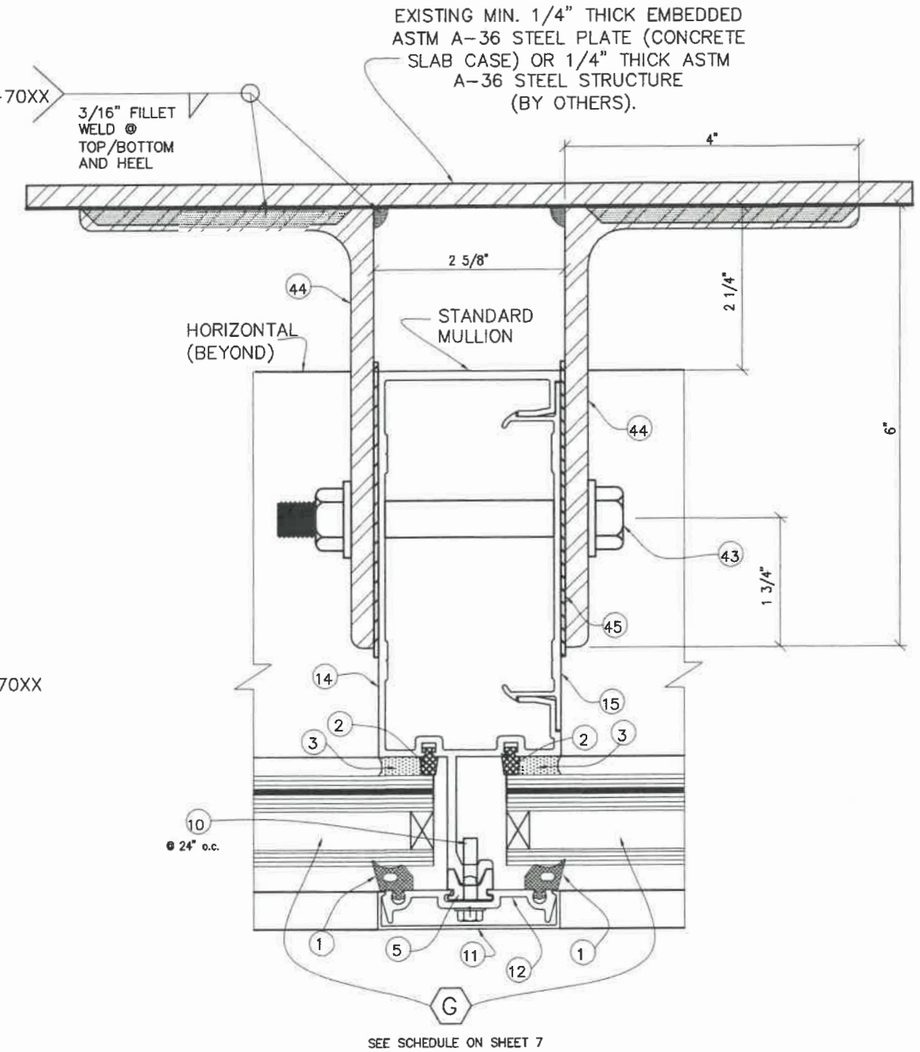

SECTION "D-D"
@ STANDARD
MULLION

STANDARD AND CORNER MULLION CONNECTION TO EXISTING INTERMEDIATE FLOOR STRUCTURE W/ DEAD AND WIND LOAD ANCHORS

FLORIDA BUILDING CODE (High & Non High Velocity Hurricane Zone)

©2021 TILTECO, INC

TILTECO INC.
TILLIT TESTING & ENGINEERING COMPANY
6355 N.W. 36th. St., Ste. 305, VIRGINIA GARDENS, FLORIDA 33166
Phone : (305)871-1530 . Fax : (305)871-1531
e-mail: tilteco@aol.com
CA-0006719
WALTER A. TILLIT Jr., P.E.
FLORIDA Lic. # 44167

WALTER A. TILLIT JR. LICENSE No. 44167 STATE OF FLORIDA PROFESSIONAL ENGINEER

P.E. SEAL/SIGNATURE/DATE

HR-251 CAPTURED CURTAIN WALL SYSTEM
LARGE & SMALL MISSILE IMPACT INSULATED GLAS S

Oldcastle BuildingEnvelope™
803 Airport Rd - Terrell, TX 75160
www.OldcastleBE.com - Phone 800-869-4567

REV. No	DESCRIPTION	DATE	REV. No	DESCRIPTION	DATE
1	OLD 18-032	04/15/21	3		
2			4		

M.P
DRAWN BY

04/15/2021
DATE

21-058
DRAWING No

SHEET 33 OF 36

CORNER MULLION CONNECTION TO EXISTING INTERMEDIATE FLOOR STRUCTURE W/ DEAD AND WIND LOAD ANCHORS (PLAN)

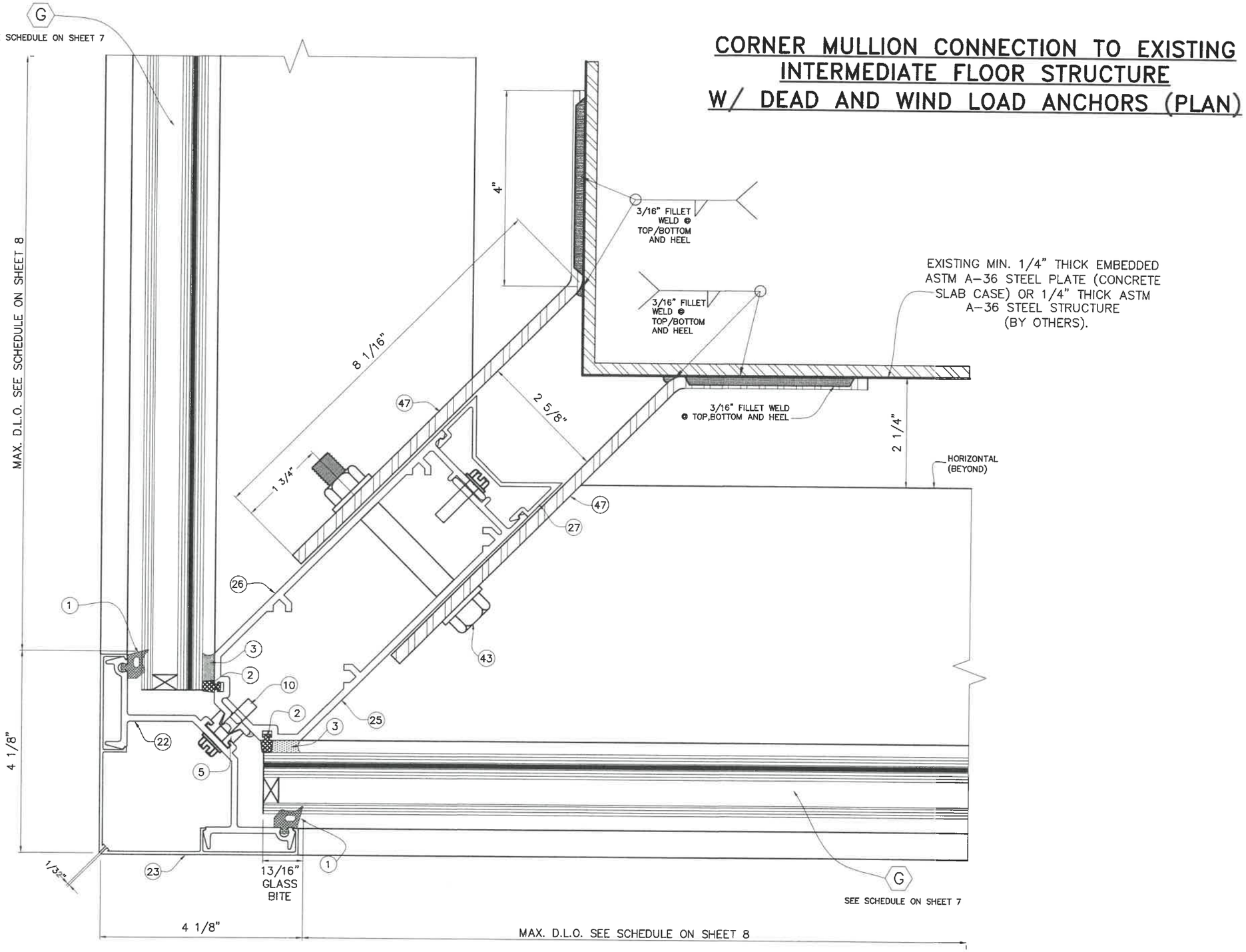

SECTION "E-E" @ CORNER MULLION

FLORIDA BUILDING CODE (High & Non High Velocity Hurricane Zone)

HR-251 CAPTURED CURTAIN WALL SYSTEM
LARGE & SMALL MISSILE IMPACT INSULATED GLASS

M.P
DRAWN BY

04/15/2021
DATE

21-058
DRAWING No

SHEET 34 OF 36

Oldcastle BuildingEnvelope™
803 Airport Rd - Terrell, TX 75160
www.OldcastleBE.com - Phone 800-869-4567

REV. No	DESCRIPTION	DATE	REV. No	DESCRIPTION	DATE
1	OLD 18-032	04/15/21	3		
2			4		

©2021 TILTECO, INC

TILTECO INC.
TILLIT TESTING & ENGINEERING COMPANY
6355 N.W. 36th. St., Ste. 305, VIRGINIA GARDENS, FLORIDA 33166
Phone : (305)871-1530 . Fax : (305)871-1531
e-mail: tilteco@aol.com
CA-0006719
WALTER A. TILLIT Jr., P.E.
FLORIDA Lic. # 44167

WALTER A. TILLIT JR. LICENSE No. 44167 STATE OF FLORIDA PROFESSIONAL ENGINEER

P.E. SEAL/SIGNATURE/DATE

DOOR HEADER CONNECTION TO CURTAIN WALL HORIZONTALS

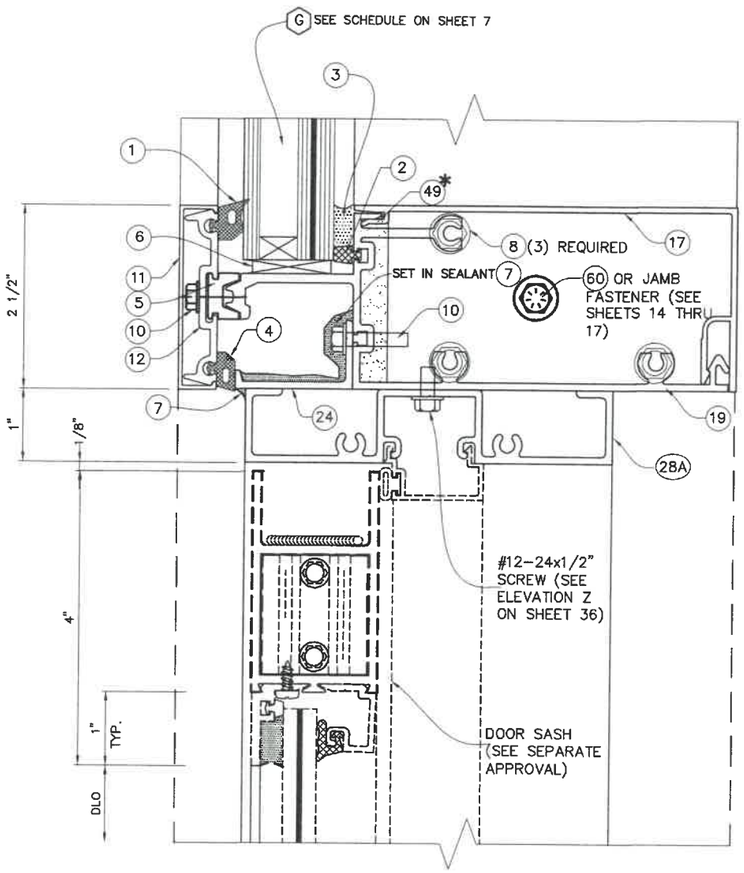

10
DR HEADER

DOOR SILL CONNECTION TO POURED CONCRETE STRUCTURE AND TO ADJACENT CURTAIN WALL MULLION "F" (SEE SHEET 9 FOR DEFINITION OF "F")

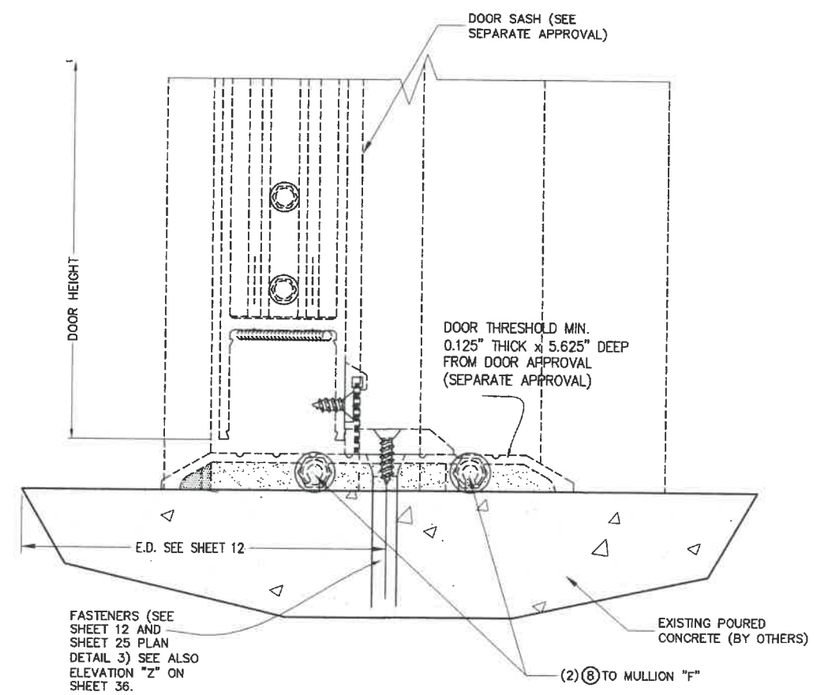

13
THRESHOLD

FLORIDA BUILDING CODE (High & Non High Velocity Hurricane Zone)

©2021 TILTECO, INC

TILTECO INC.
TILLIT TESTING & ENGINEERING COMPANY
6355 N.W. 36th. St., Ste. 305, VIRGINIA GARDENS, FLORIDA 33166
Phone : (305)871-1530 . Fax : (305)871-1531
e-mail: tilteco@aol.com
CA-0006719
WALTER A. TILLIT JR., P.E.
FLORIDA Lic. # 44167

WALTER A. TILLIT JR. LICENSE No. 44167 STATE OF FLORIDA PROFESSIONAL ENGINEER

P.E. SEAL/SIGNATURE/DATE

HR-251 CAPTURED CURTAIN WALL SYSTEM
LARGE & SMALL MISSILE IMPACT INSULATED GLASS

Oldcastle BuildingEnvelope™
803 Airport Rd - Terrell, TX 75160
www.OldcastleBE.com - Phone 800-869-4567

REV. No	DESCRIPTION	DATE
1	OLD 18-032	04/16/21
2		
3		
4		

REV. No	DESCRIPTION	DATE

M.P
DRAWN BY

04/15/2021
DATE

21-058
DRAWING No

SHEET 35 OF 36

DOOR JAMBS CONNECTION TO CURTAIN WALL

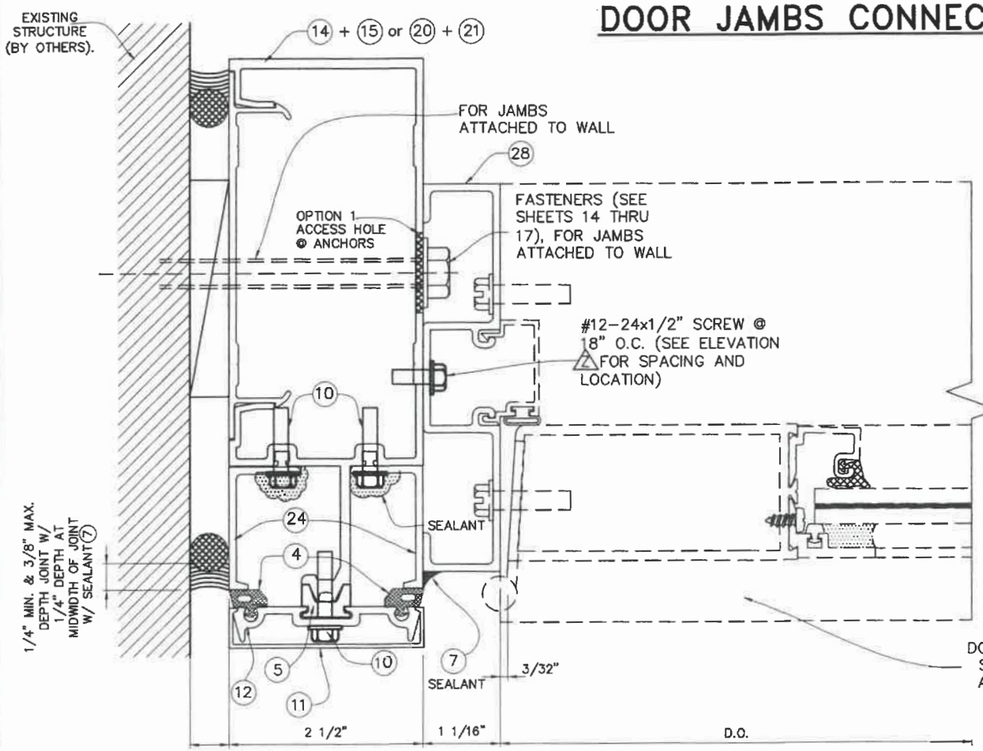

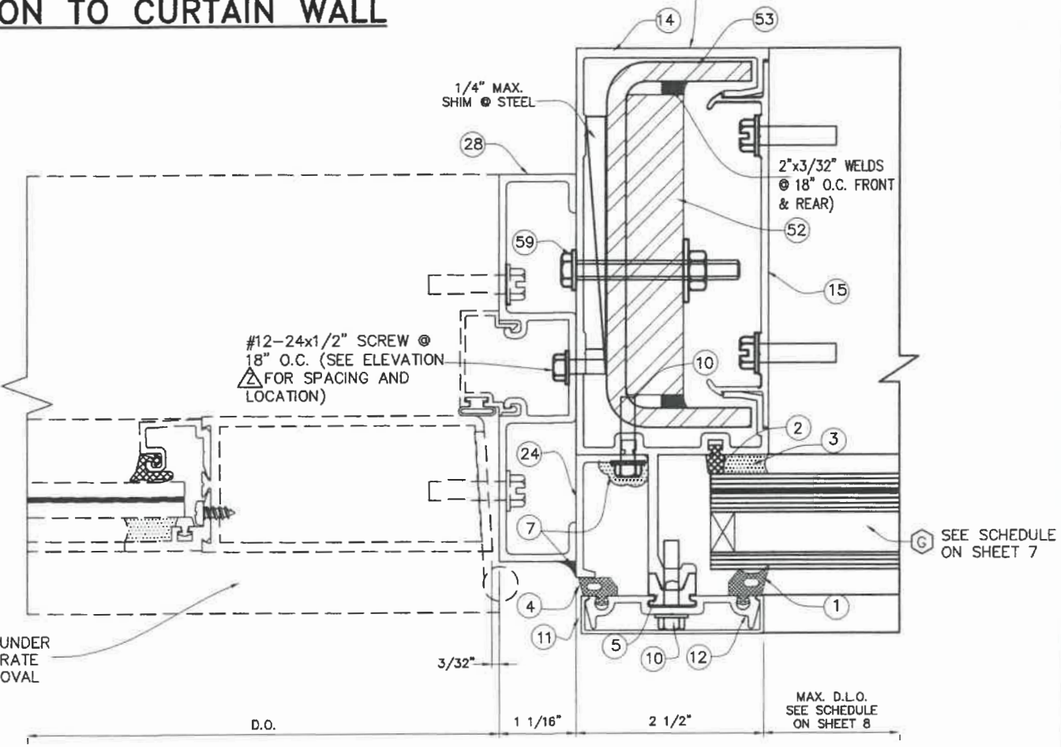

* 3/8" MIN. & 3/4" MAX. WIDE JOINT W/ SEALANT(7) FOR JAMB ATTACHED TO WALL & 1/2" MIN. & 1 3/8" MAX. WIDE JOINT W/ SEALANT(7) FOR JAMB NOT ATTACHED TO WALL

6
DOOR JAMB TO CURTAIN WALL JAMB

7
DOOR JAMB TO CURTAIN WALL DOOR MULLION

* NOTE: ABOVE INDICATED MAXIMUM AND MINIMUM VALUES FOR SPECIFIED SEALANT VERTICAL JOINT WIDTH AT JAMBS CONNECTED & NOT CONNECTED TO WALL (FREE STANDING) HAVE BEEN DETERMINED ONLY TAKING INTO CONSIDERATION THE ACTUAL MOVEMENT OF GLASS WALL AT JAMBS DUE TO THERMAL, WIND AND ITS OWN CONSTRUCTION TOLERANCE, AND NOT PERFORMANCE FACTORS FROM THE SURROUNDING STRUCTURE.

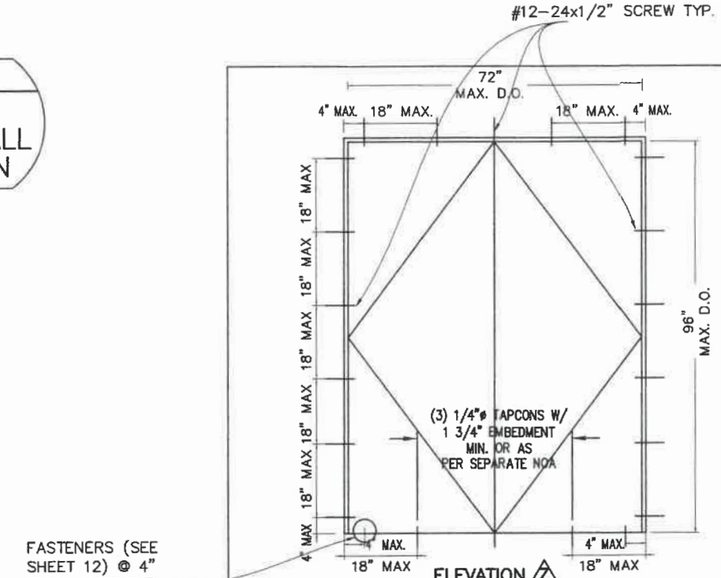

ELEVATION 2

LOCATIONS FOR DOOR FRAME ATTACHMENTS

ABOVE DIMENSIONS ARE MAXIMUM SIZES TESTED

FLORIDA BUILDING CODE (High & Non High Velocity Hurricane Zone)

HR-251 CAPTURED CURTAIN WALL SYSTEM
LARGE & SMALL MISSILE IMPACT INSULATED GLASS

Oldcastle BuildingEnvelope™
803 Airport Rd - Terrell, TX 75160
www.OldcastleBE.com - Phone 800-869-4567

REV. No	DESCRIPTION	DATE	REV. No	DESCRIPTION	DATE
1	OLD 18-032	04/15/21	3		
2			4		

M.P DRAWN BY

04/15/2021 DATE

21-058 DRAWING No

SHEET 36 OF 36

©2021 TILTECO, INC

TILTECO INC.
TILLIT TESTING & ENGINEERING COMPANY
6355 N.W. 36th. St., Ste. 305, VIRGINIA GARDENS, FLORIDA 33166
Phone : (305)871-1530 . Fax : (305)871-1531
e-mail: titeco@aol.com
CA-0006719
WALTER A. TILLIT Jr., P.E.
FLORIDA Lic. # 44167

WALTER A. TILLIT JR. LICENSE No. 4416 STATE OF FLORIDA PROFESSIONAL ENGINEER

P.E. SEAL/SIGNATURE/DATE